US010060689B2

(12) **United States Patent**
Grier

(10) **Patent No.: US 10,060,689 B2**
(45) **Date of Patent: Aug. 28, 2018**

(54) **FIREARM SYSTEM AND METHOD**

(71) Applicant: **Martin Grier**, Tallahassee, FL (US)

(72) Inventor: **Martin Grier**, Tallahassee, FL (US)

(73) Assignee: **Martin Grier**, Tallahassee, FL (US)

(*) Notice: Subject to any disclaimer, the term of this patent is extended or adjusted under 35 U.S.C. 154(b) by 0 days.

(21) Appl. No.: **14/992,713**

(22) Filed: **Jan. 11, 2016**

(65) **Prior Publication Data**

US 2017/0198994 A1 Jul. 13, 2017

(51) **Int. Cl.**

F41A 3/66	(2006.01)
F41A 9/25	(2006.01)
F41A 21/16	(2006.01)
F41C 23/06	(2006.01)

(52) **U.S. Cl.**

CPC ***F41A 3/66*** (2013.01); ***F41A 9/25*** (2013.01); ***F41A 21/16*** (2013.01); ***F41C 23/06*** (2013.01)

(58) **Field of Classification Search**

CPC F41A 3/64–3/66; F41A 9/35; F41A 19/18; F41A 19/186; F41A 19/19; F41A 19/25; F41A 19/68; F41A 21/06; F41A 9/25; F41A 21/16; F41F 1/08; F41C 23/06

USPC 42/1.06; 89/126–127, 1.41

See application file for complete search history.

(56) **References Cited**

U.S. PATENT DOCUMENTS

1,363,608	A *	12/1920	Luciani	F41F 1/08 89/1.41
1,660,590	A *	2/1928	Baldwin	F41A 9/35 102/438
1,723,450	A *	8/1929	Tomiska	F41A 3/58 42/40
2,231,879	A *	2/1941	Brightman	F41A 9/35 89/1.41

(Continued)

FOREIGN PATENT DOCUMENTS

EP	2525183 A1	11/2012
WO	2017123645 A1	7/2017

OTHER PUBLICATIONS

Korean Intellectual Property Office; PCT International Search Report, Issued in Connection to PCT/US2017/013034; dated Apr. 26, 2017; 3 pages; Korea.

(Continued)

Primary Examiner — Stephen Johnson
Assistant Examiner — Benjamin S Gomberg
(74) *Attorney, Agent, or Firm* — Greenberg Traurig LLP

(57) **ABSTRACT**

Embodiments of the invention include a firearm system and method of assembly of the firearm system including a receiver complex including a receiver coupled to a forward receiver. A feed port is positioned between the receiver and the forward receiver, and a striker coil assembly is positioned proximate the receiver, and includes a plurality of strikers each extending at least partially through a coil. An interchangeable barrel is coupled to the forward receiver

(Continued)

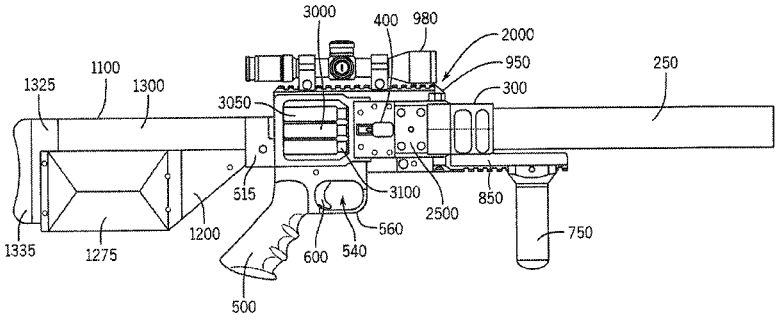

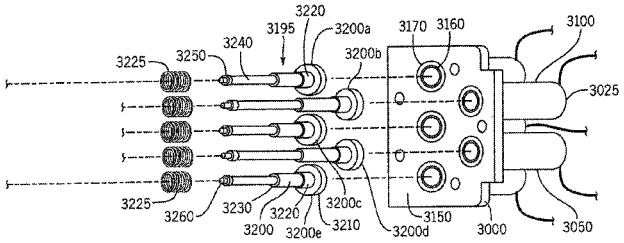

forming a breech. In some embodiments, the firearm system includes a breech that includes a plurality of side-by-side bores of the barrel. Some embodiments include a magazine coupled to the receiver complex adjacent the feedport to simultaneously feed more than one dischargeable projectile into the feedport with a single charge block. In some embodiments, the charge block includes a plurality of chambers and a plurality of projectiles positioned within the plurality of chambers.

19 Claims, 37 Drawing Sheets

(56) **References Cited**

U.S. PATENT DOCUMENTS

2,353,601	A *	7/1944	Tisdale, Sr.	F41A 9/35 102/438
2,436,175	A *	2/1948	Neal	F41A 3/26 42/16
2,926,568	A *	3/1960	Neder	F41A 9/35 89/126
2,976,770	A *	3/1961	Fletcher	F41A 9/35 89/126
2,981,156	A *	4/1961	Fletcher	F41A 19/21 89/127
3,745,878	A *	7/1973	Jampy	F41A 9/35 42/15
8,516,729	B2	8/2013	Hayes et al.	
8,756,843	B1	6/2014	Cantrell	
8,904,690	B1	12/2014	Cantrell	
8,931,199	B1	1/2015	Cauley, Jr. et al.	
9,003,687	B2	4/2015	Cauley, Jr. et al.	
9,103,609	B2	8/2015	Cantrell	
9,335,108	B2	5/2016	Cauley, Jr. et al.	
2012/0279106	A1	11/2012	Hayes et al.	
2012/0291321	A1	11/2012	Spiro	
2014/0317985	A1	10/2014	Cauley, Jr. et al.	
2015/0007480	A1	1/2015	Cauley, Jr. et al.	
2015/0184961	A1	7/2015	Cantrell	
2015/0219415	A1	8/2015	Cauley, Jr. et al.	
2015/0300772	A1	10/2015	Carson	

OTHER PUBLICATIONS

Korean Intellectual Property Office; PCT Written Opinion of the International Searching Authority, Issued in Connection to PCT/US2017/013034; dated Apr. 26, 2017; 7 pages; Korea.

* cited by examiner

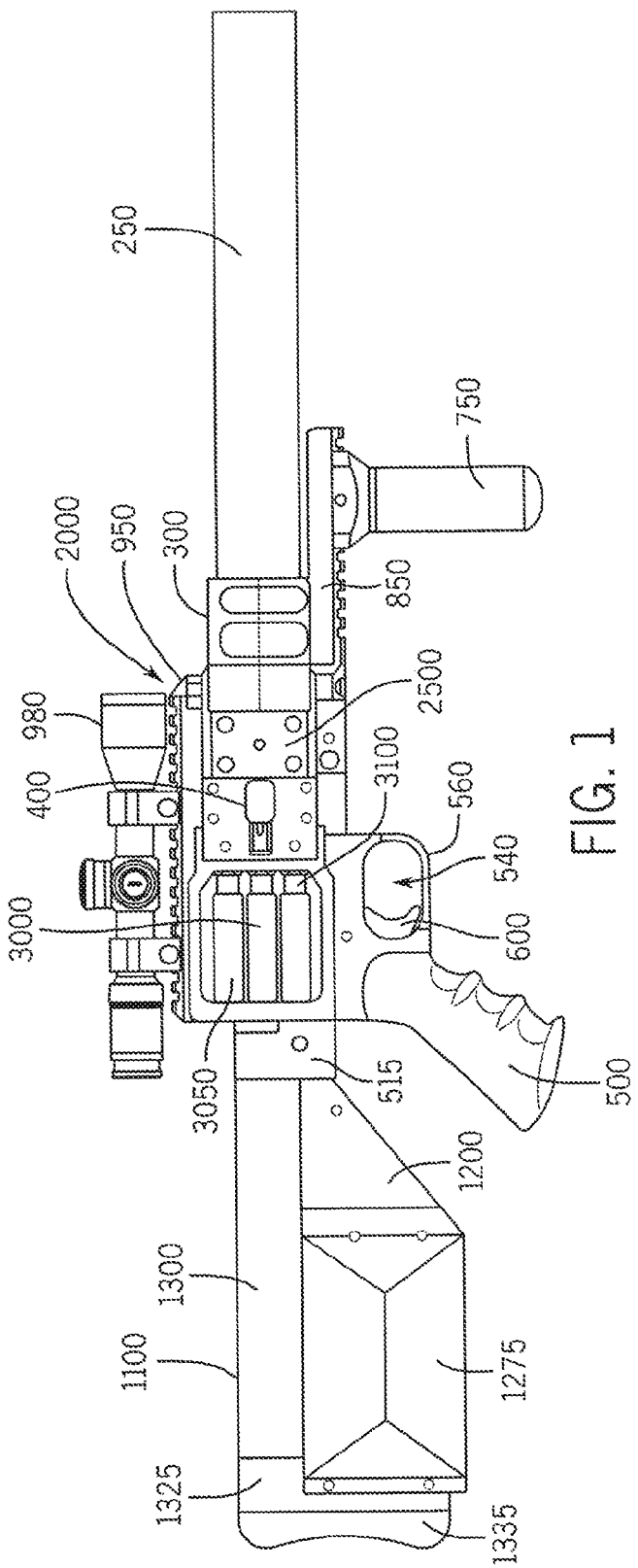
250
750
2000
950
300
850
980
2500
400
3100
560
540
3000
600
3050
515
500
1200
1300
1100
1275
1325
1335

FIG. 1

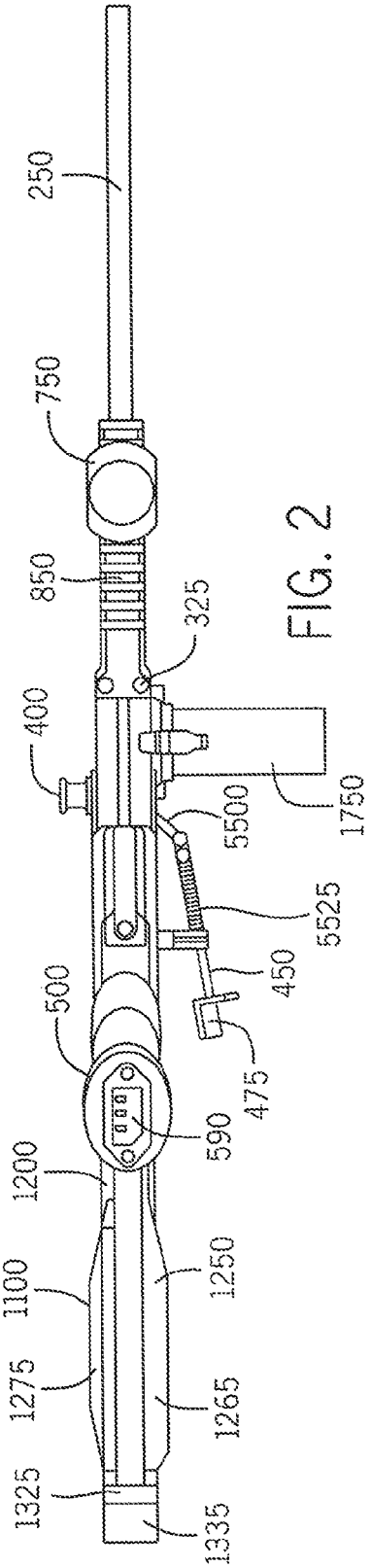
250
750
850
325
400
5500
1750
5525
450
500
475
590
1200
1250
1100
1275
1265
1325
1335

FIG. 2

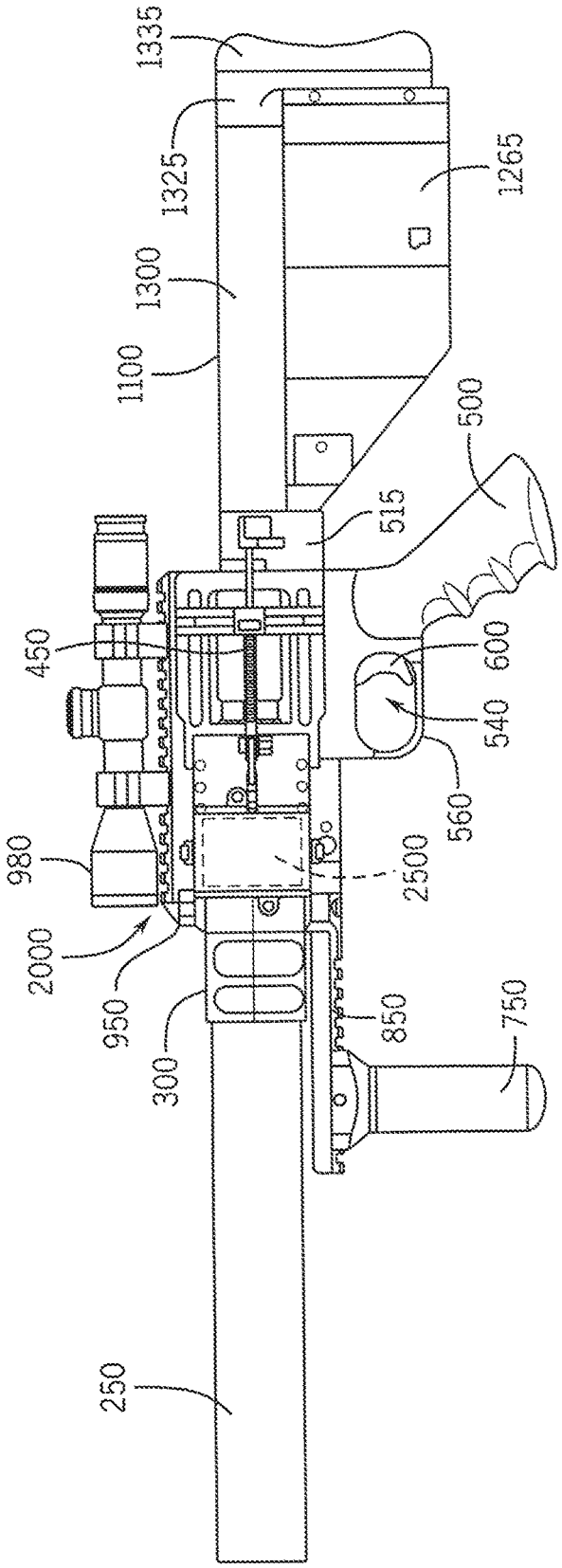
1335
1325
1265
1300
1100
500
515
450
600
540
560
980
2500
2000
950
850
750
300
250

FIG. 3

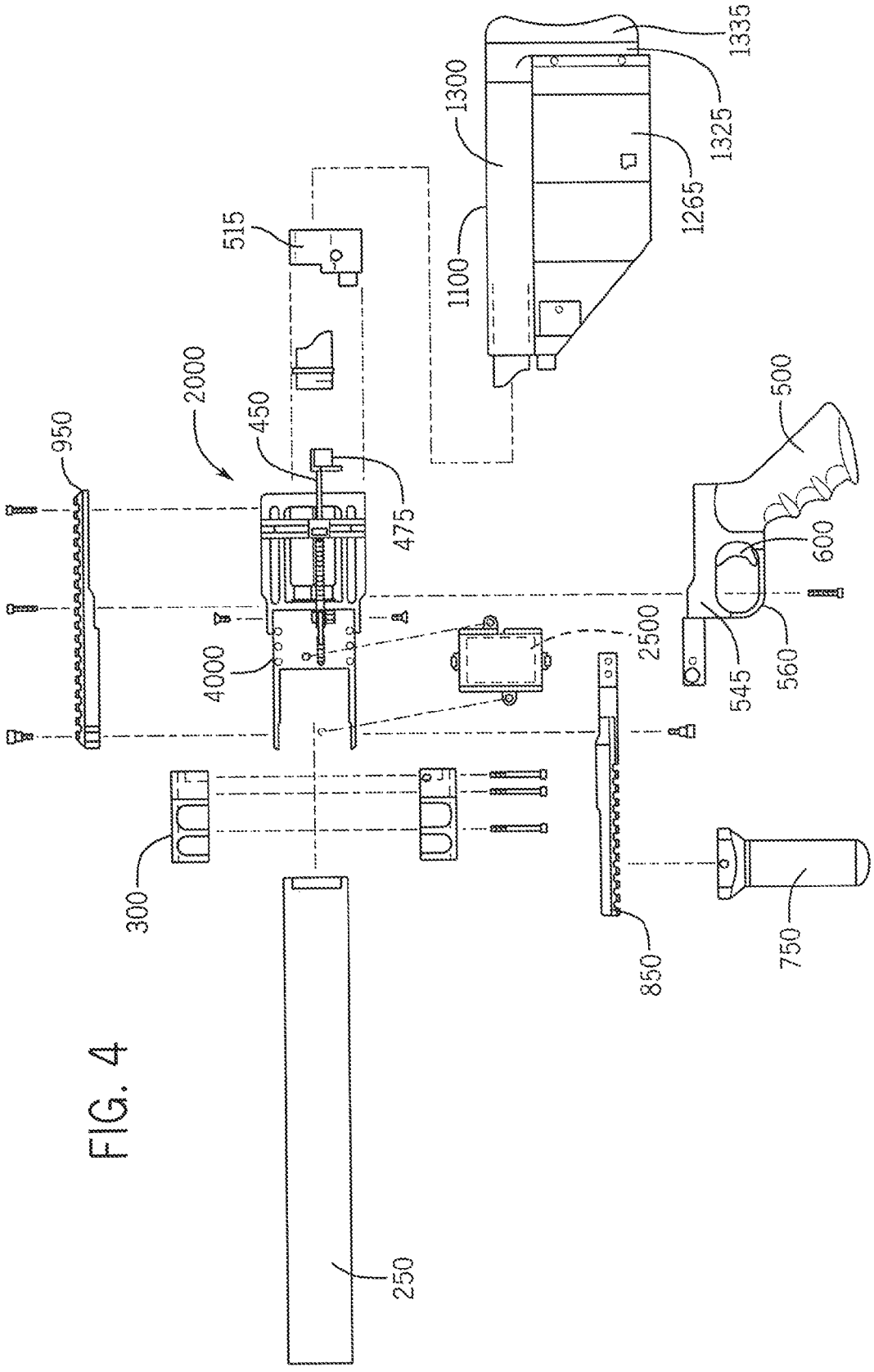
1335
1325
1300
1265
1100
515
2000
450
475
950
500
600
560
545
2500
4000
300
850
750
250

FIG. 4

FIG. 5

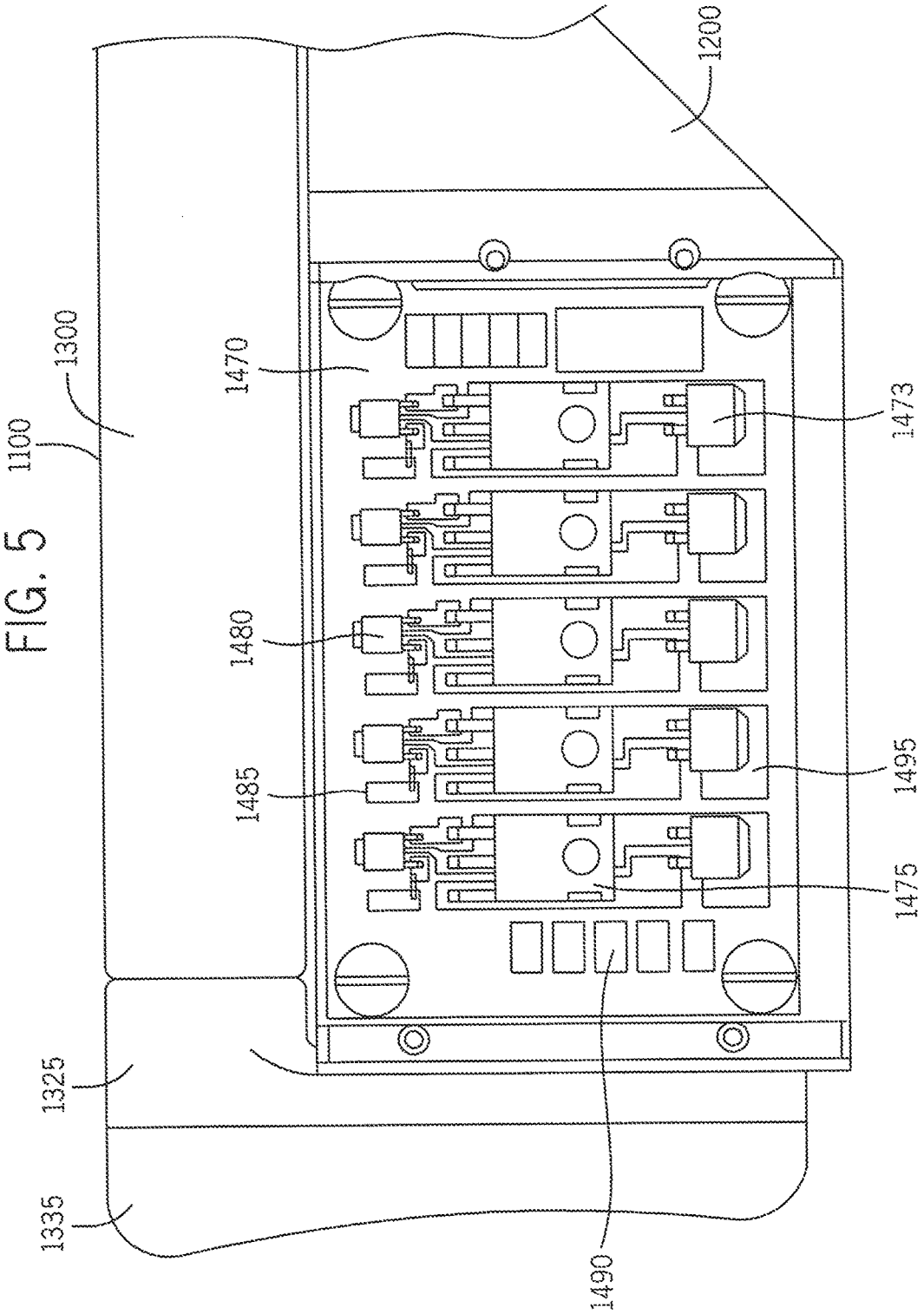

FIG. 6

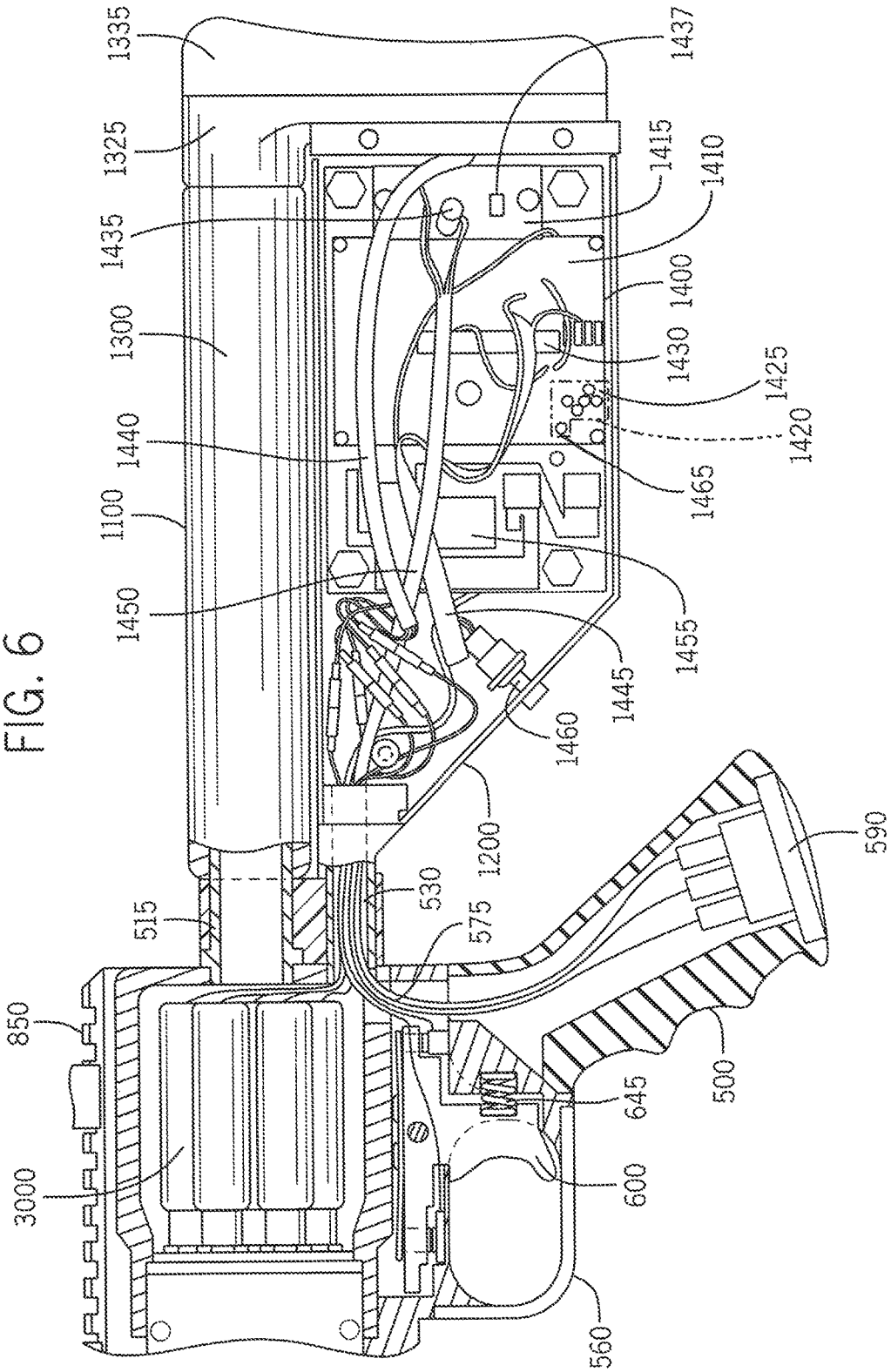
1335
1325
1435
1300
1440
1100
1450
1437
1415
1410
1400
1430
1425
1420
1465
1455
1445
1460
1200
530
575
515
590
500
645
600
560
850
3000

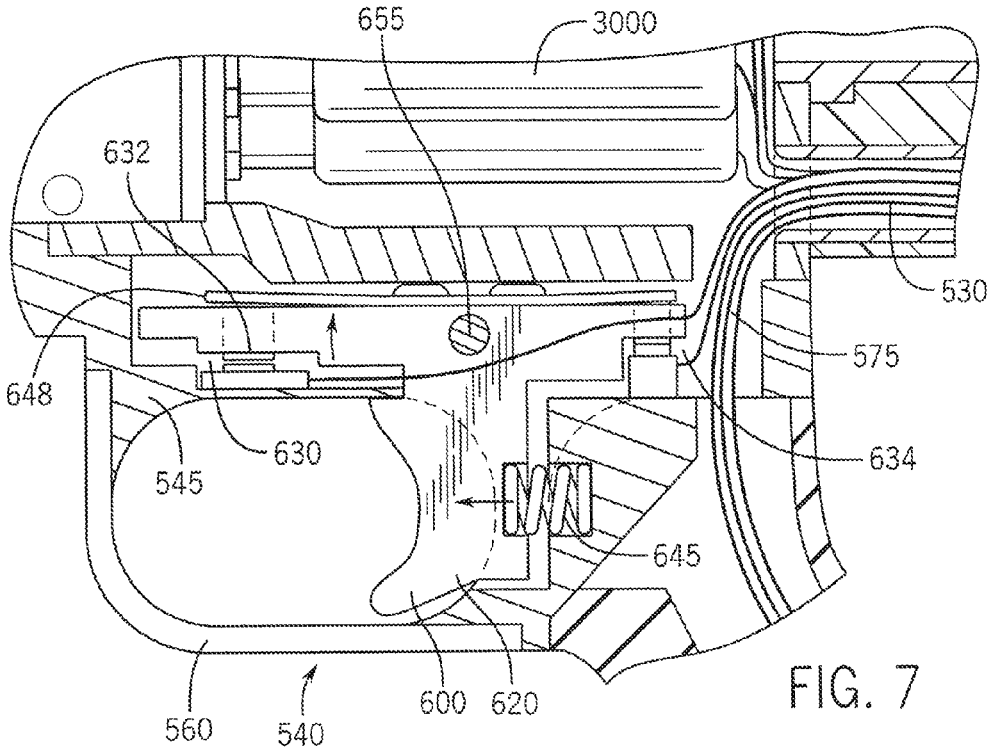
655
3000
632
530
575
648
630
634
545
645
560
540
600
620

FIG. 7

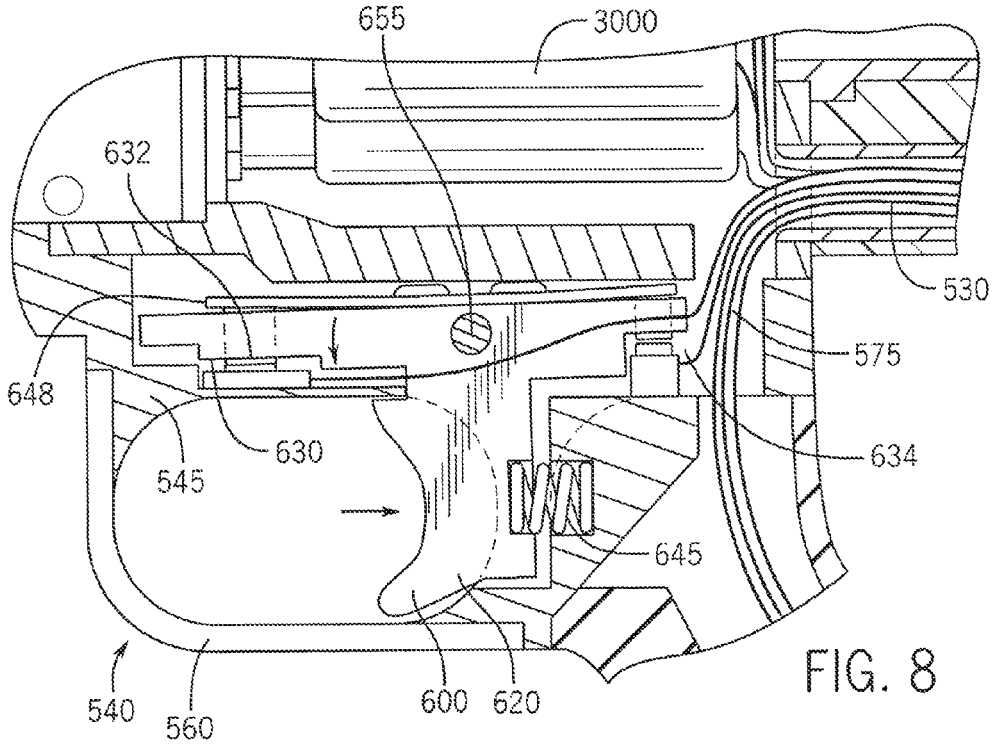
655
3000
632
530
575
648
630
634
545
645
540
560
600
620

FIG. 8

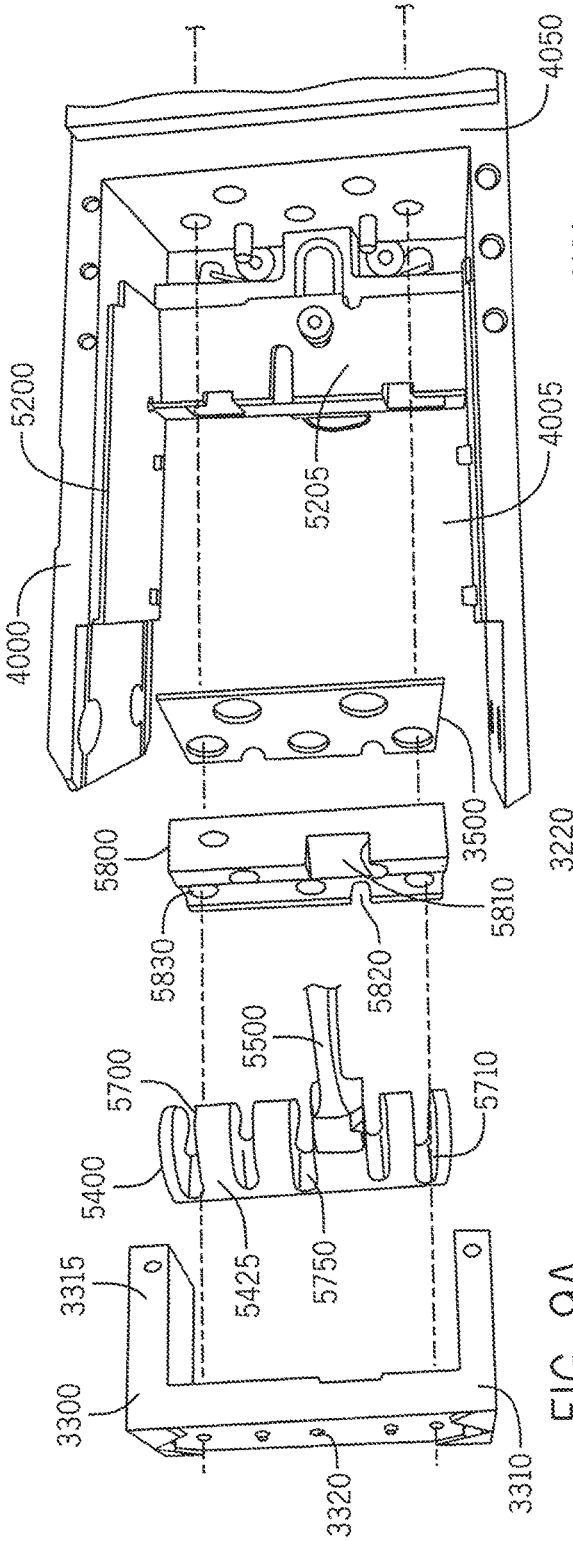
4050
5200
4005
5205
4000
3500
5800
5810
5830
5820
5500
5700
5710
5400
5425
5750
3315
3300
3320
3310

FIG. 9A

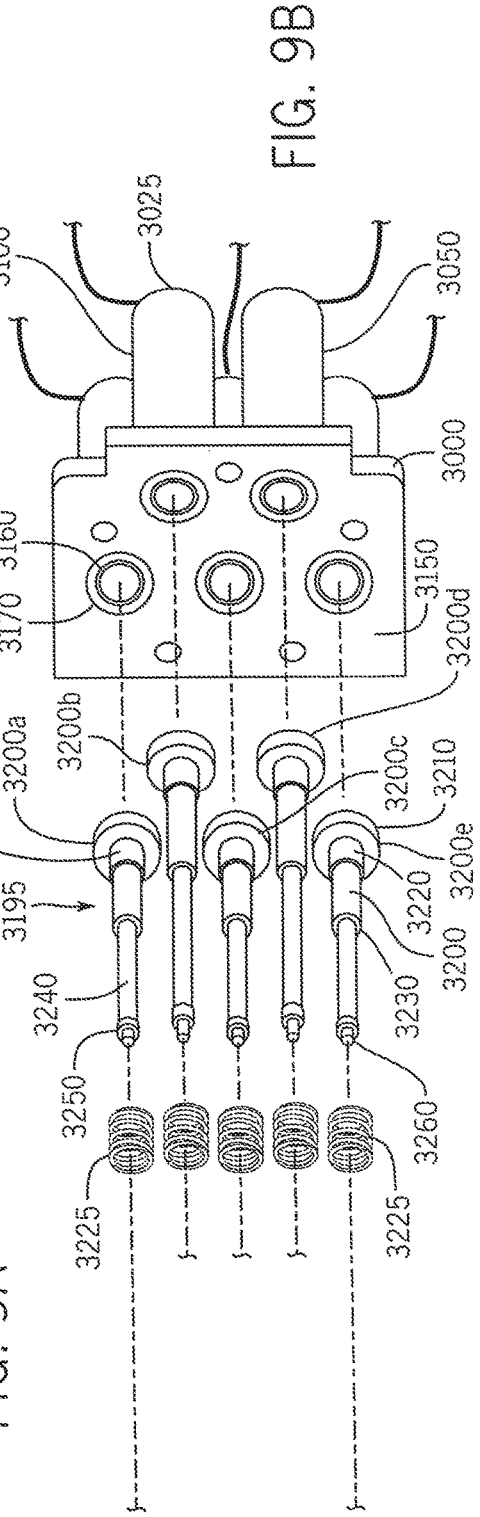
3100
3025
3050
3000
3160
3170
3150
3200d
3200a
3200b
3200c
3210
3220
3195
3200e
3240
3230
3250
3260
3225

FIG. 9B

FIG. 10A

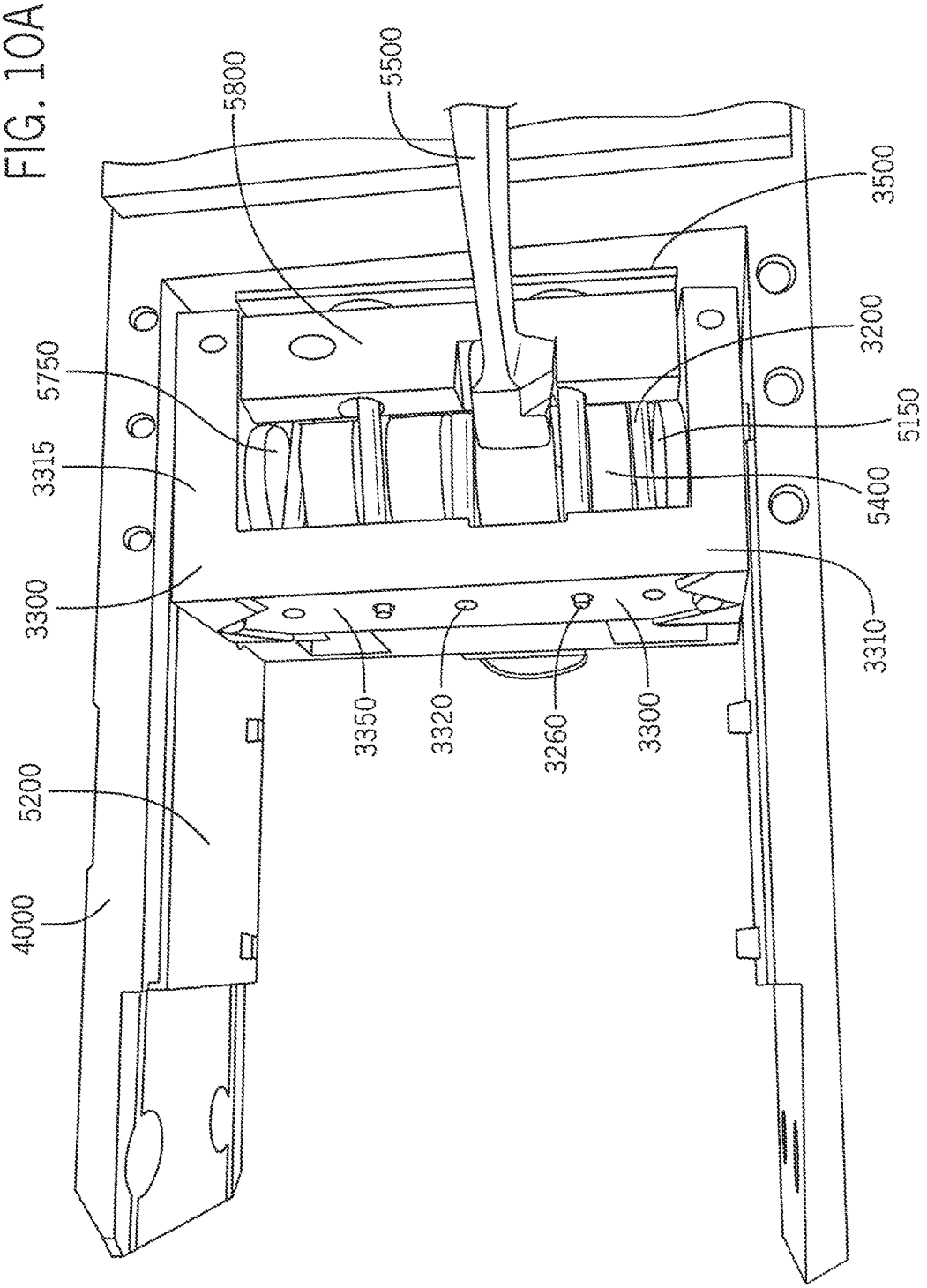
5800
5500
3500
3200
5750
5150
3315
5400
3300
3310
3350
3320
3260
3300
5200
4000

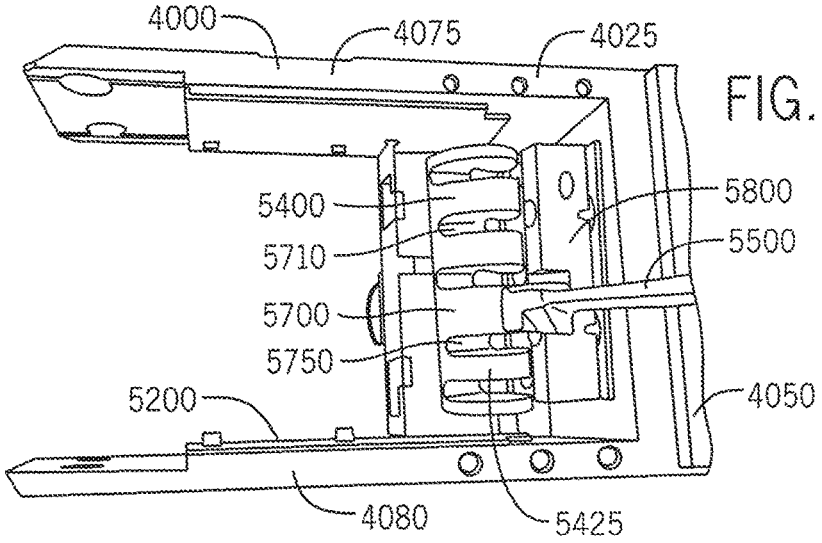

FIG. 10B

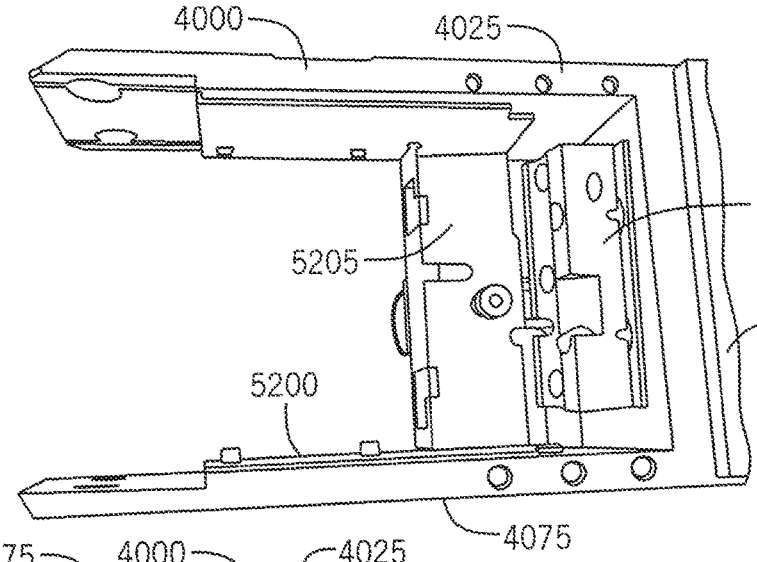

FIG. 10C

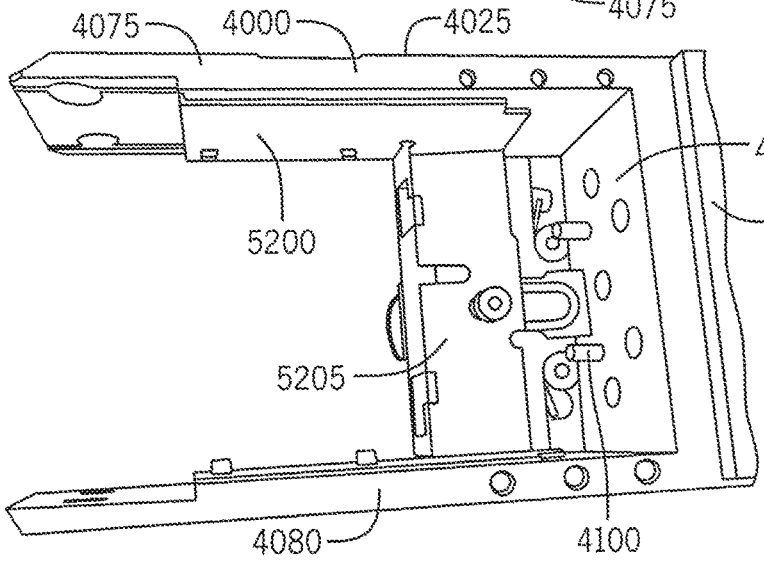

FIG. 10D

FIG. 10E

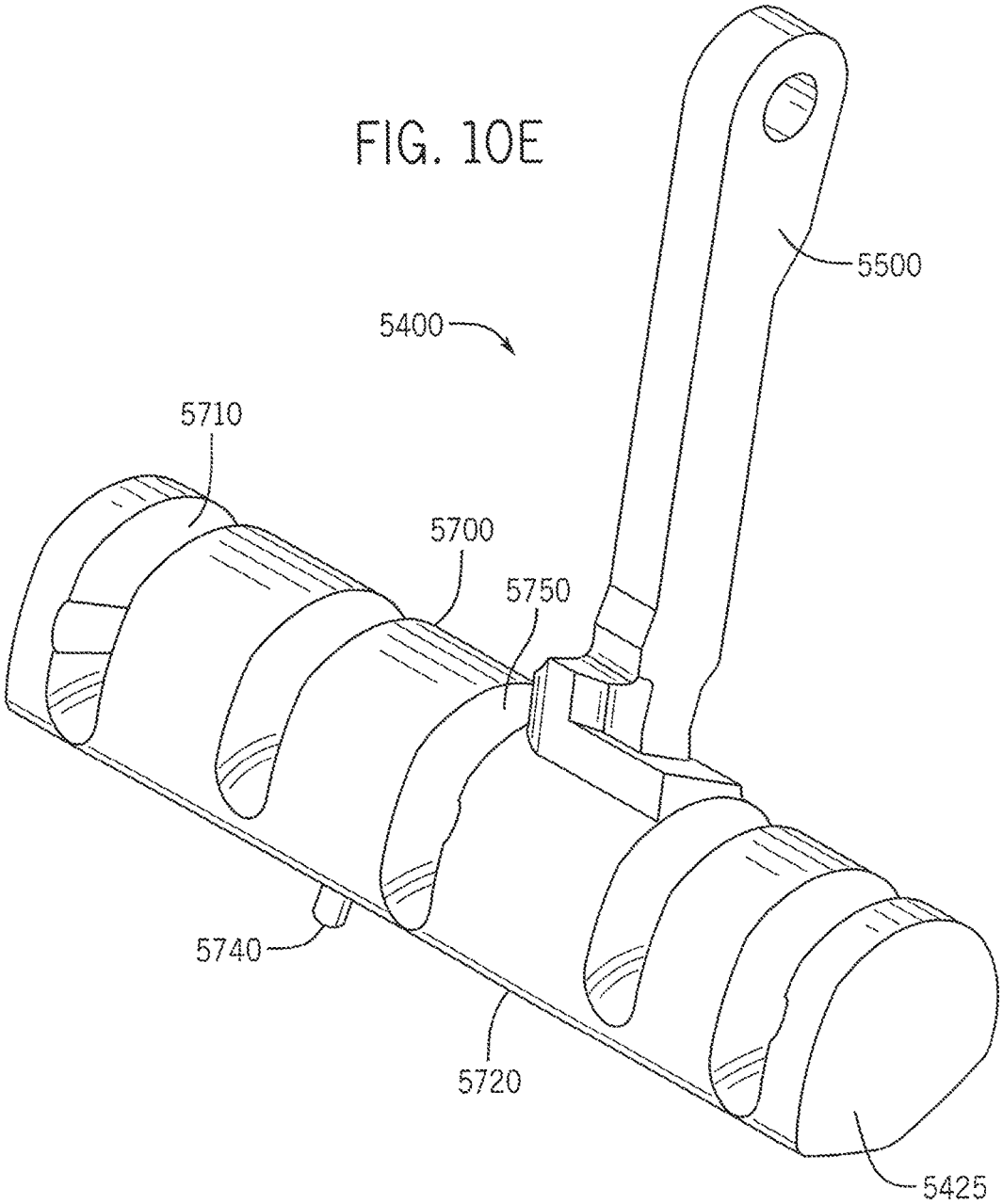

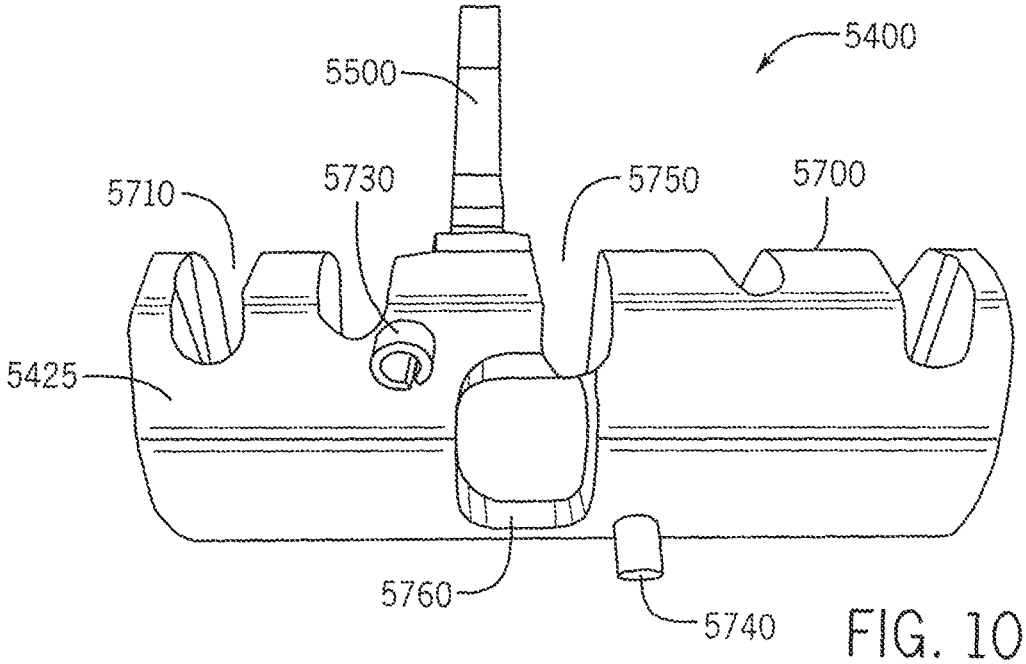

FIG. 10F

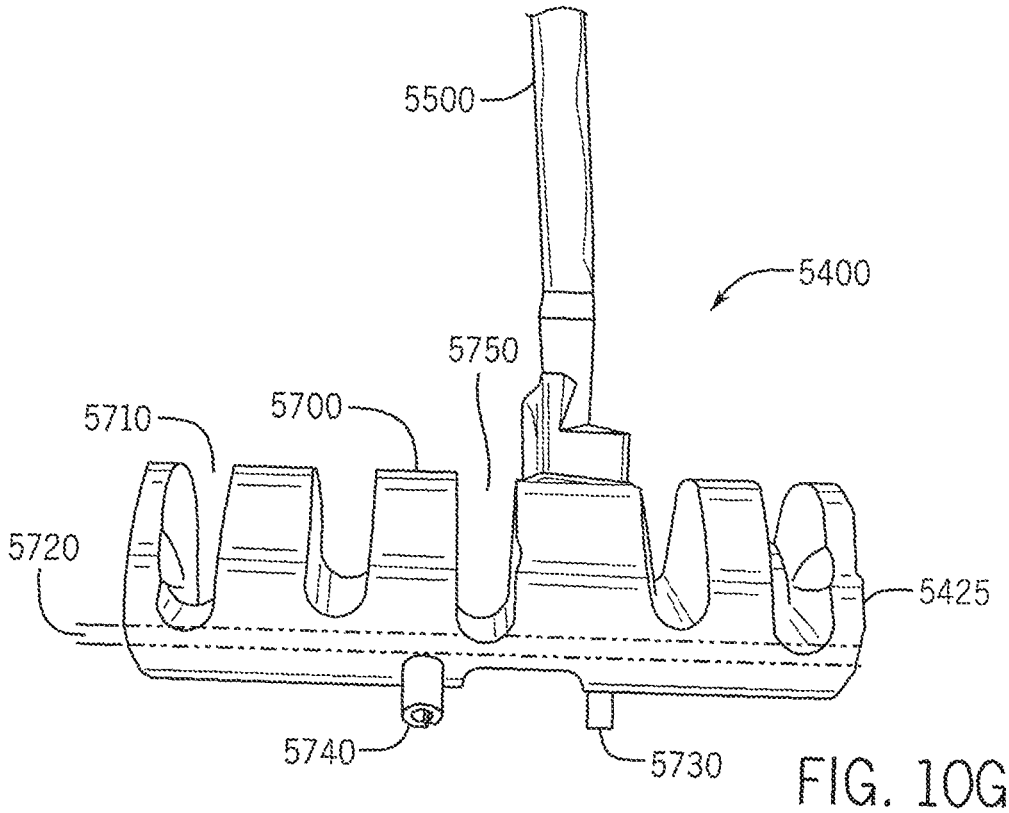

FIG. 10G

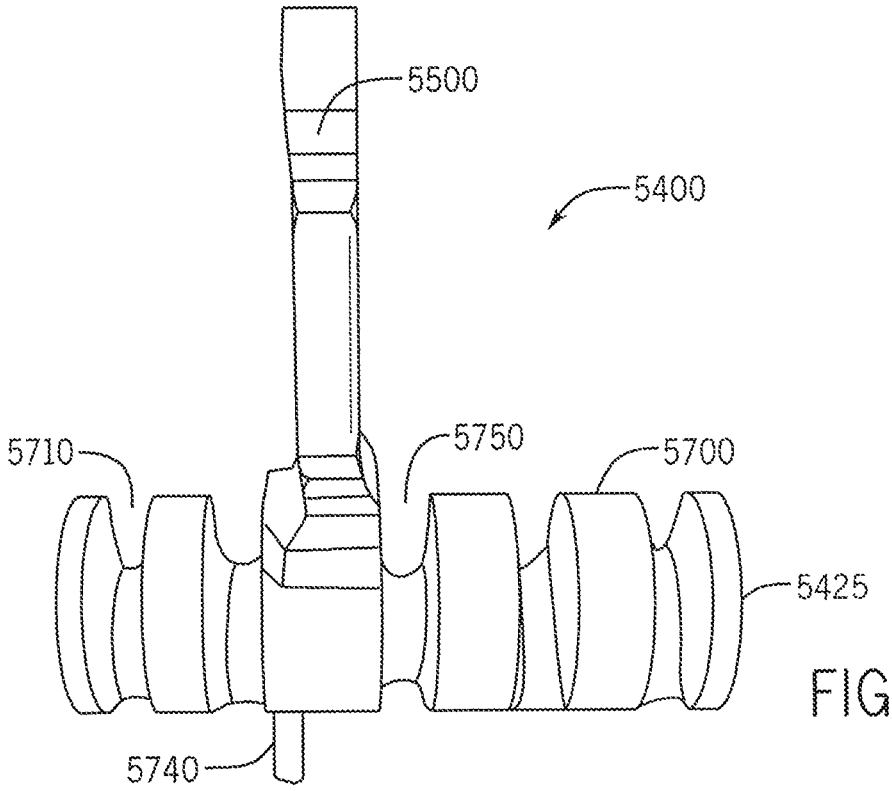

FIG. 10H

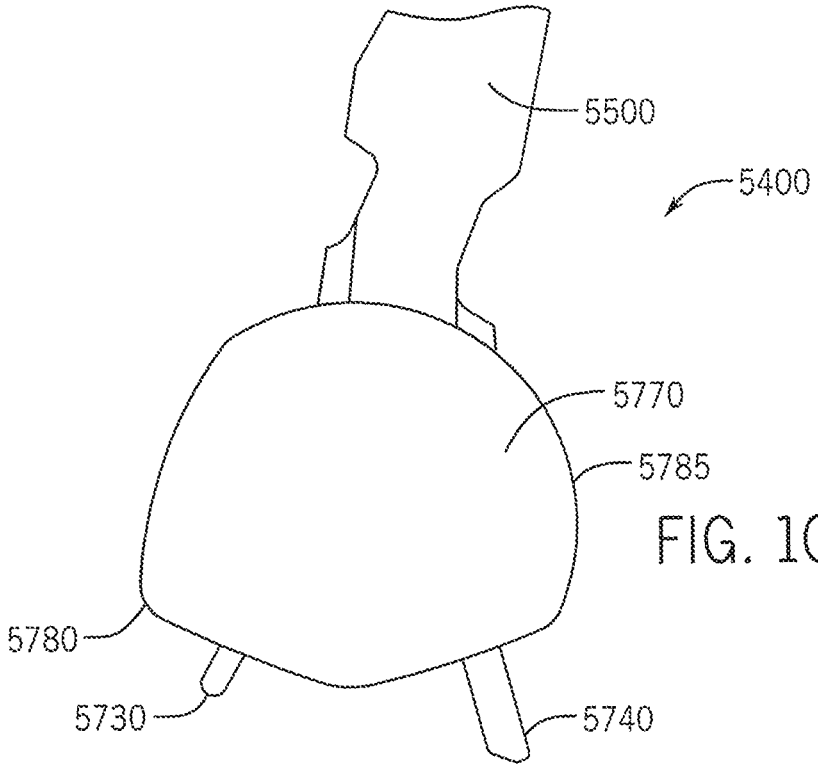

FIG. 10I

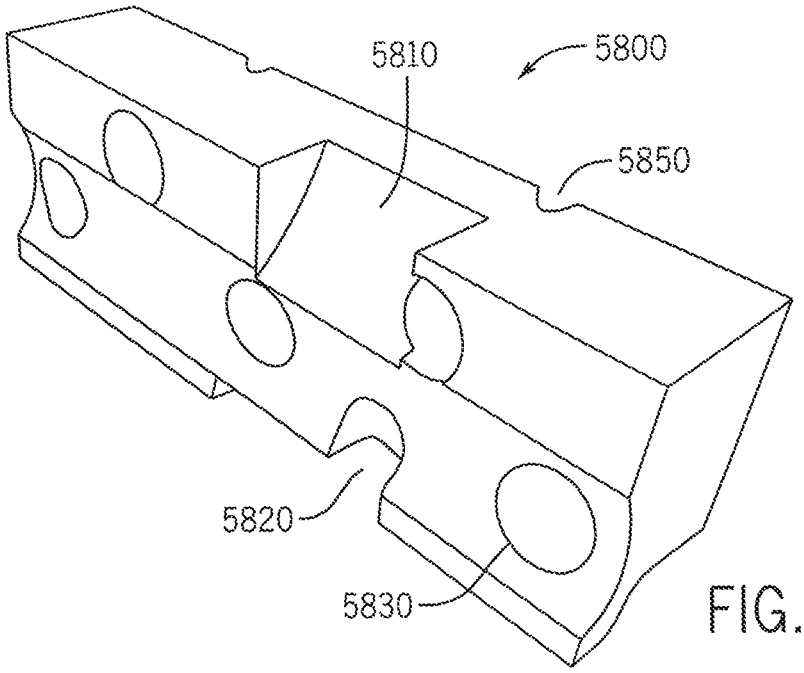

FIG. 10J

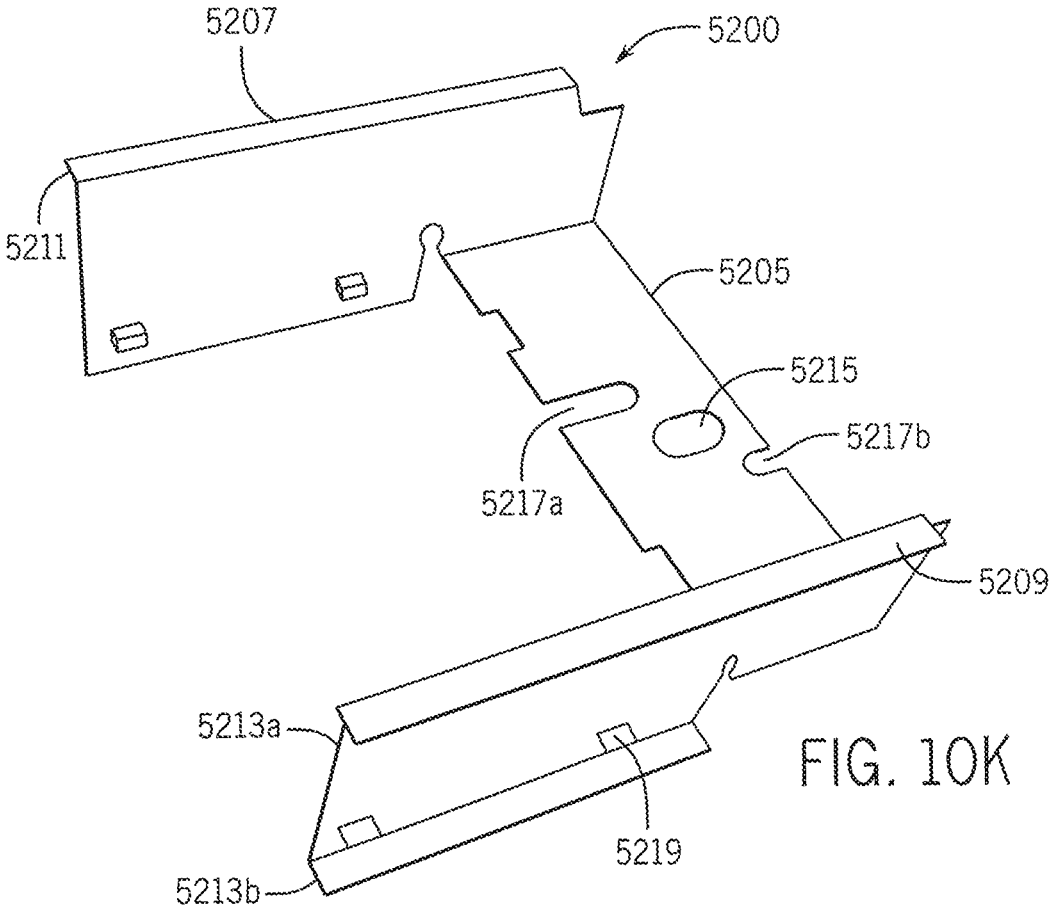

FIG. 10K

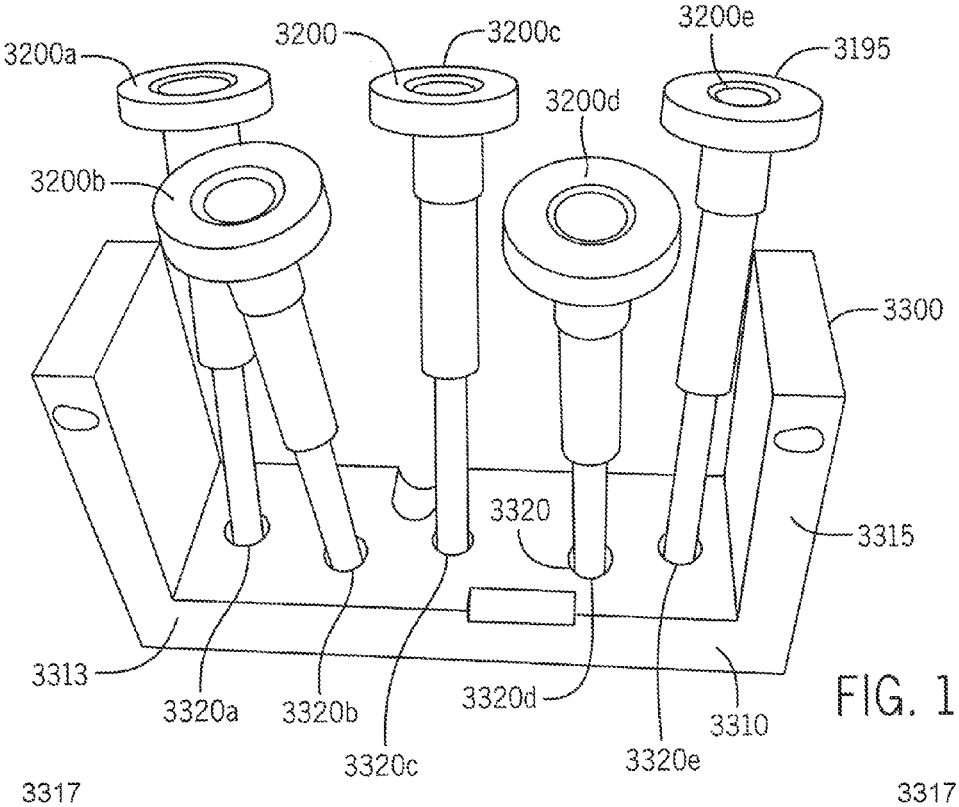

FIG. 11A

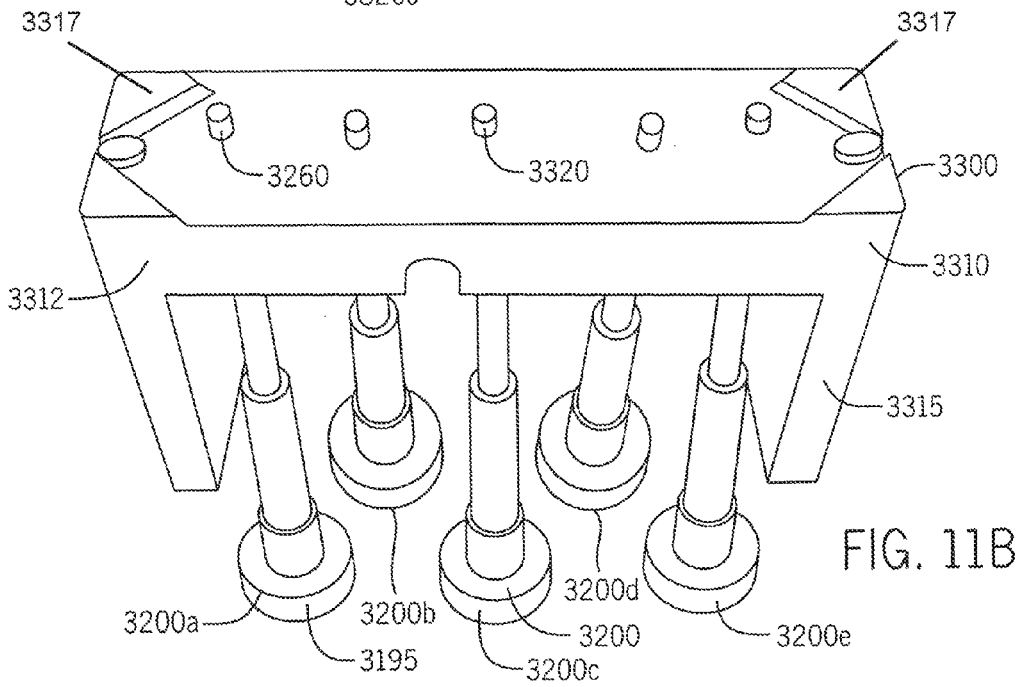

FIG. 11B

FIG. 12

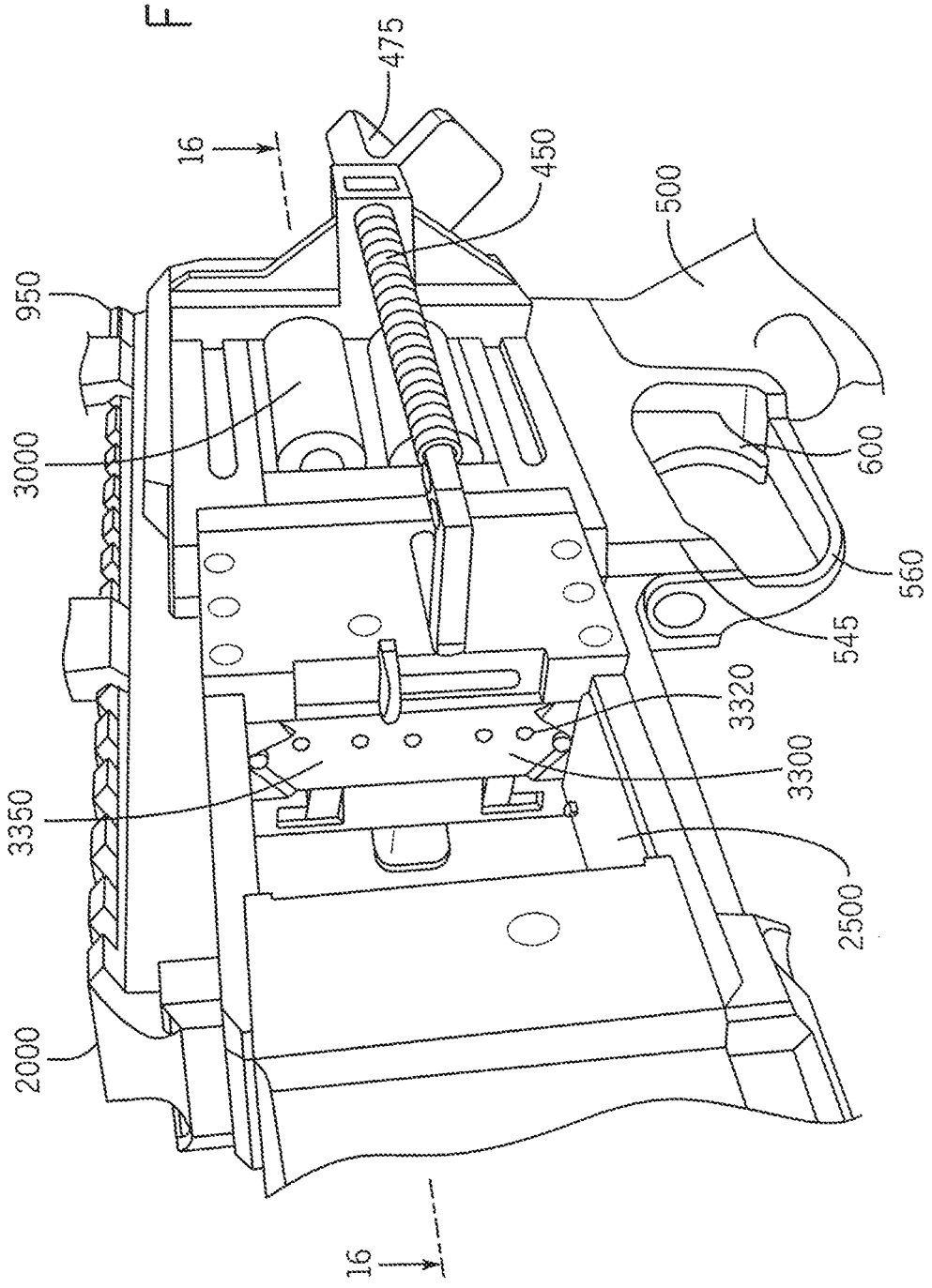

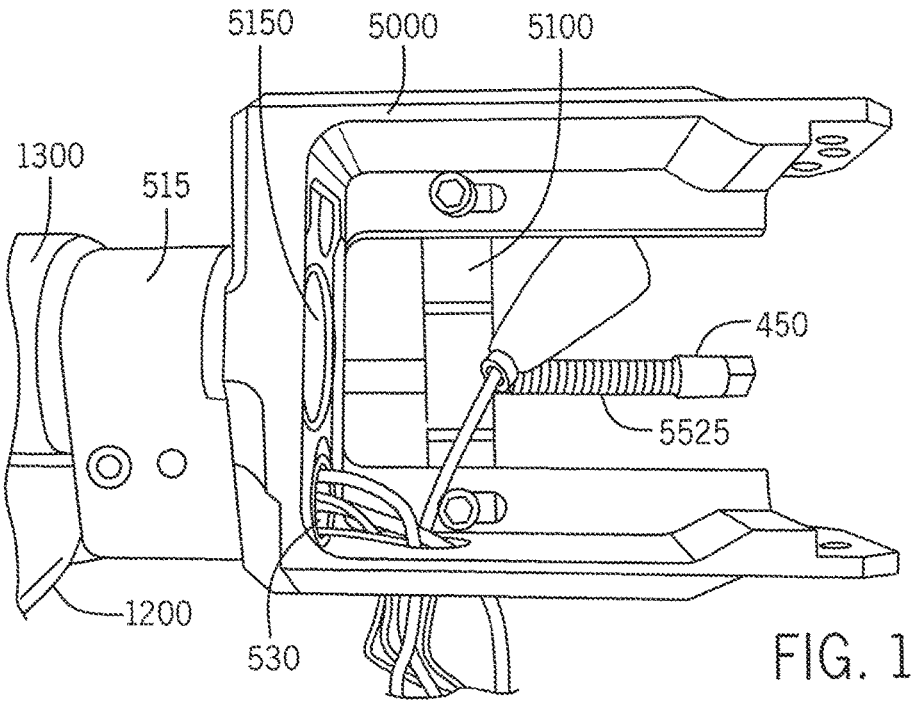

FIG. 13A

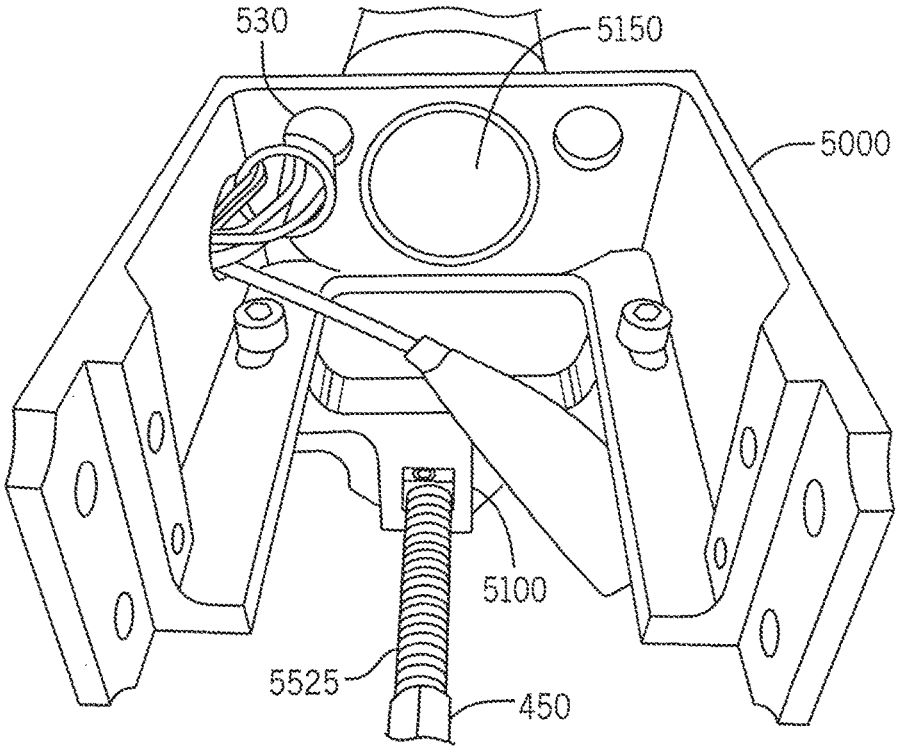

FIG. 13B

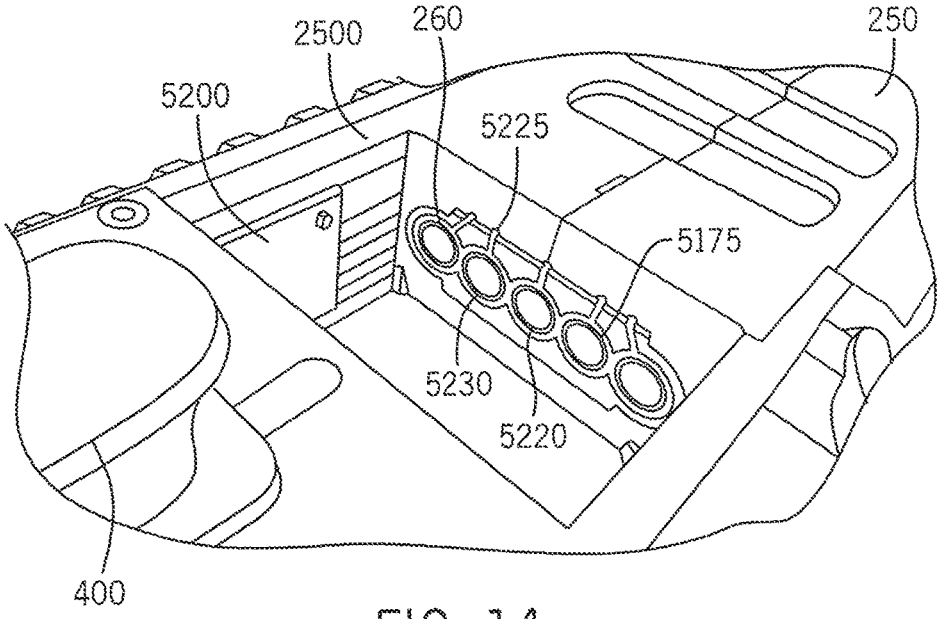
2500
260
250
5200
5225
5175
5230
5220
400

FIG. 14

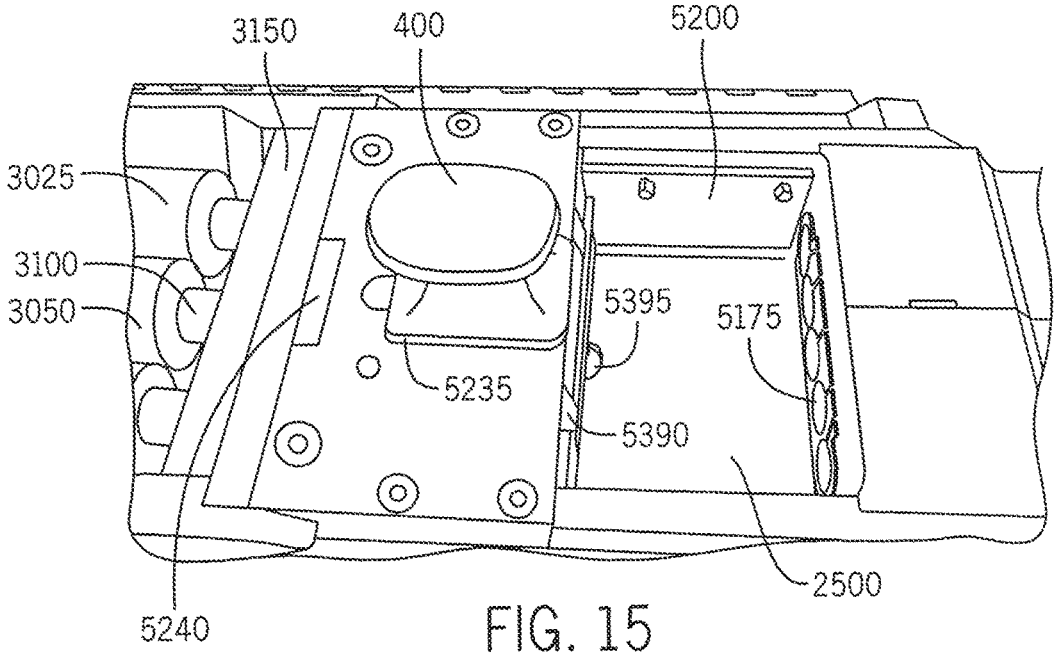
3150
400
5200
3025
3100
3050
5395
5175
5235
5390
2500
5240

FIG. 15

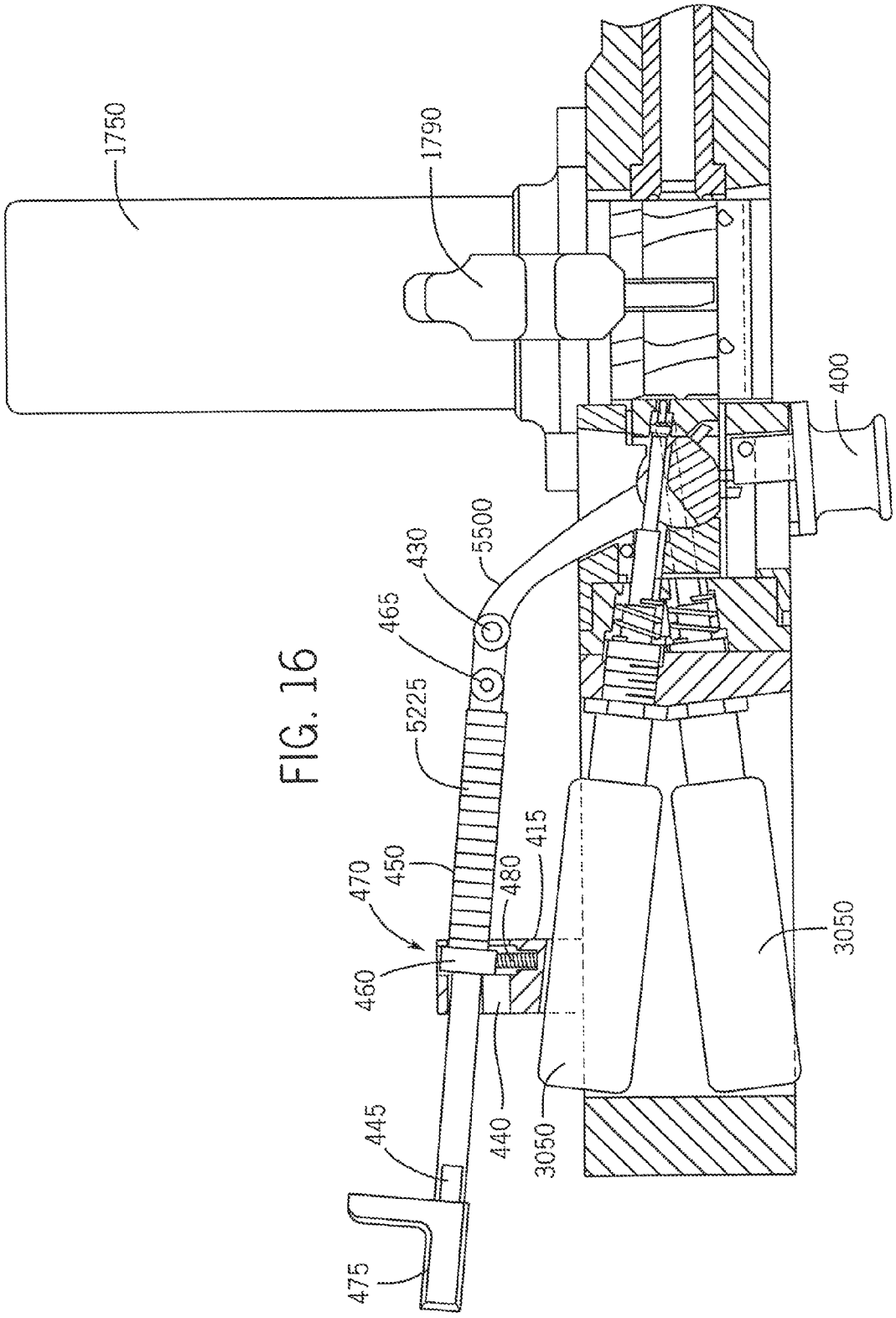
1750
1790
400
5500
430
465
5225
415
480
450
470
460
445
475
440
3050
3050

FIG. 16

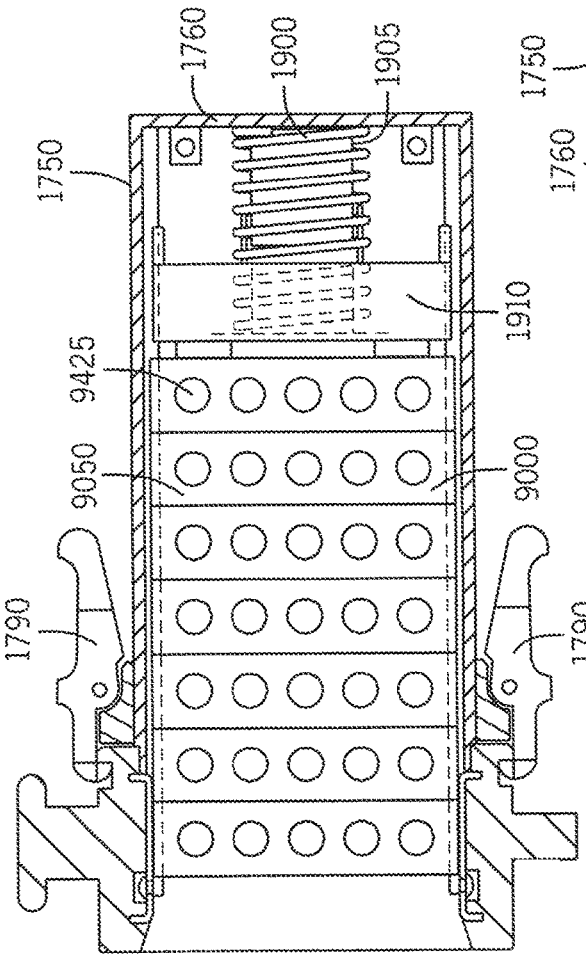

FIG. 17

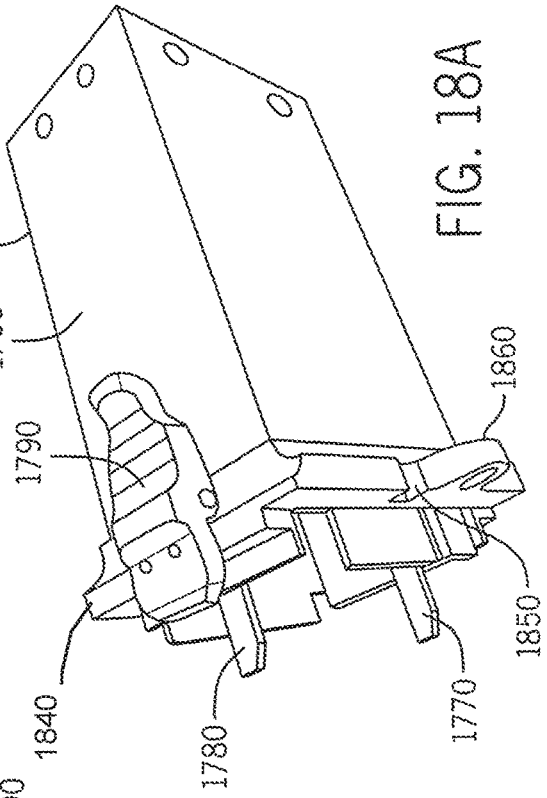

FIG. 18A

FIG. 18B

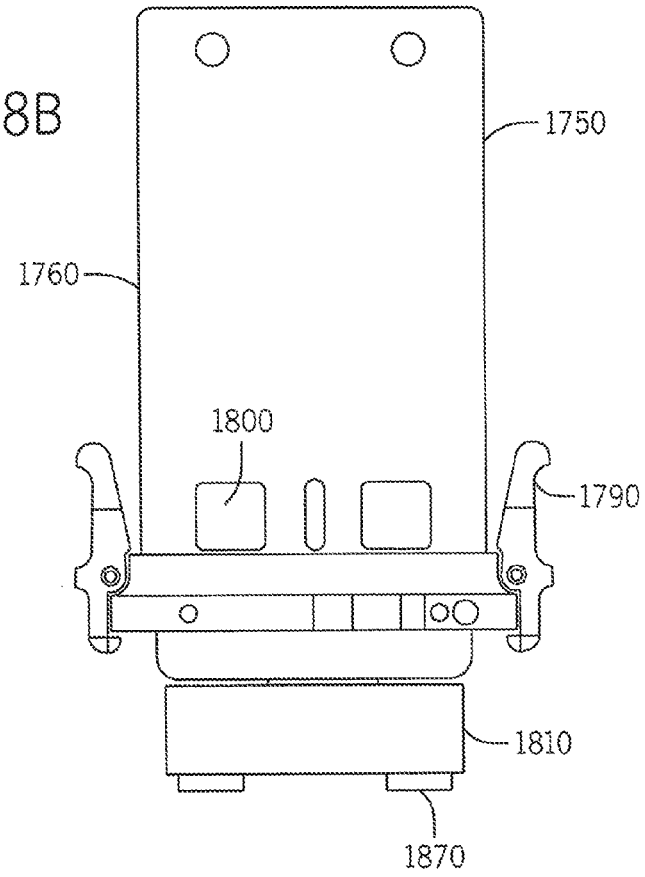

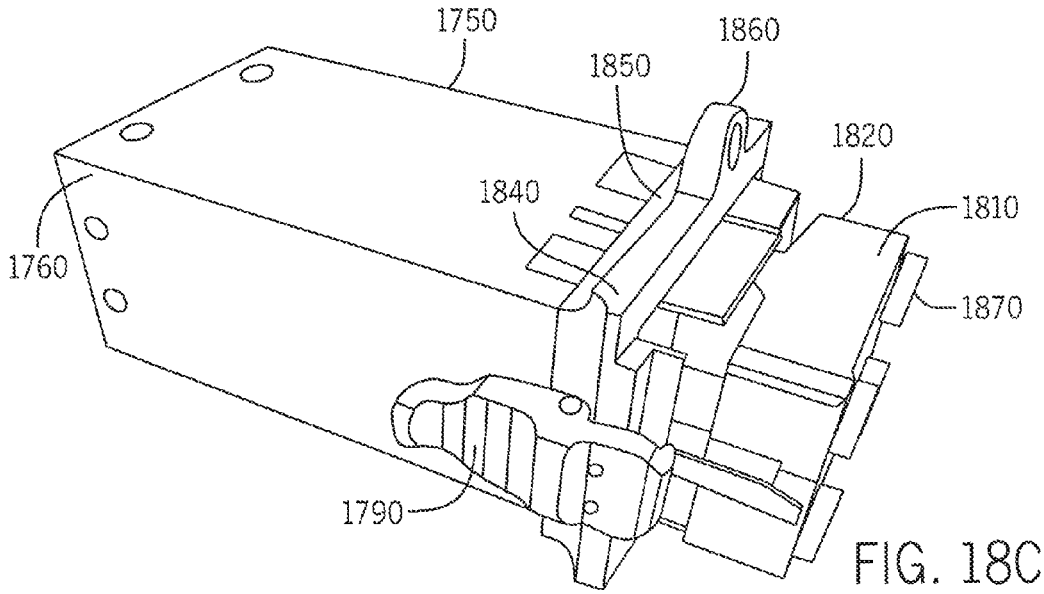

FIG. 18C

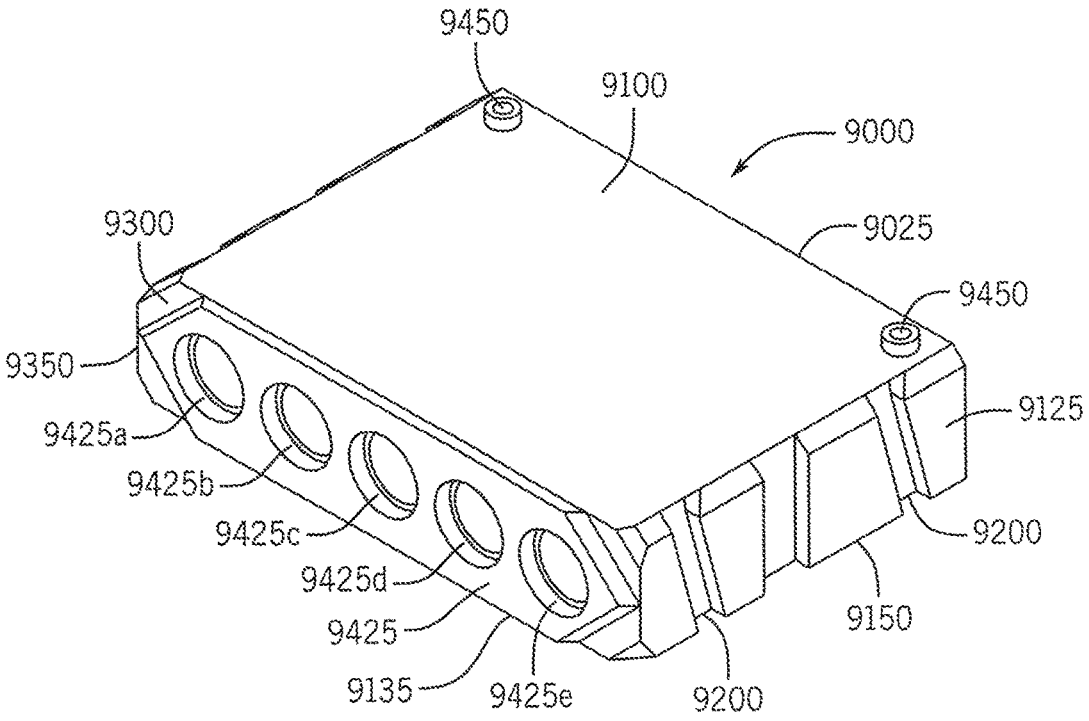
9450
9100
9000
9300
9025
9450
9350
9125
9425a
9425b
9425c
9425d
9425
9135
9425e
9200
9150
9200

FIG. 19

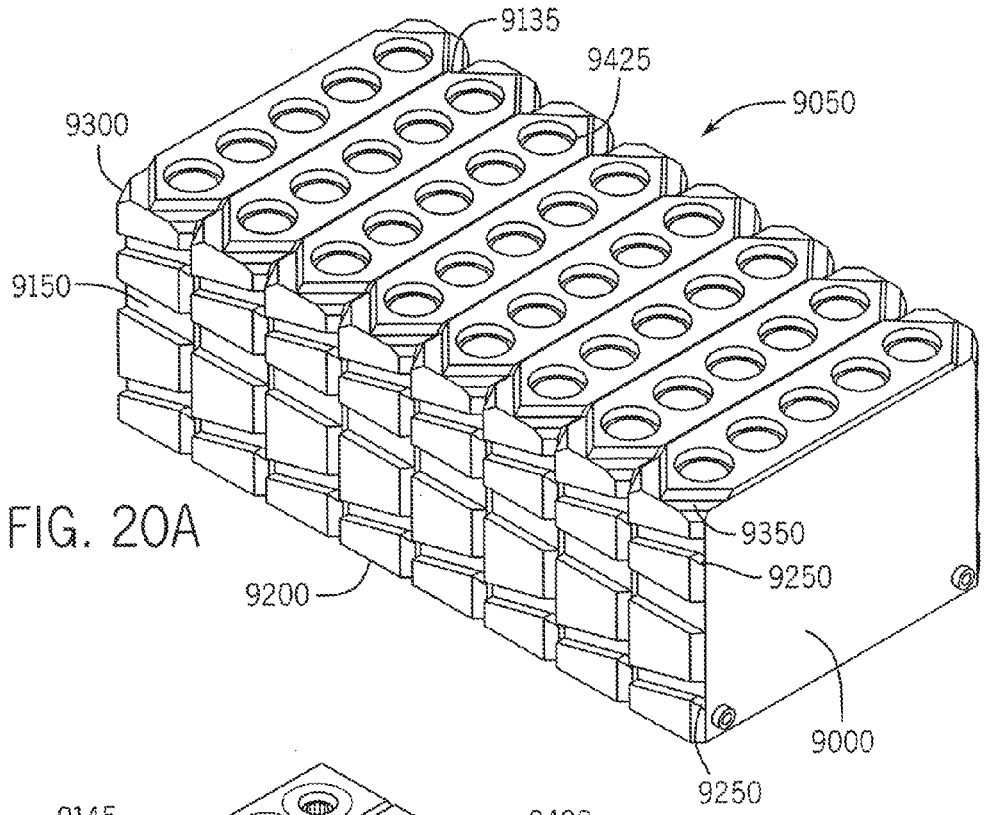

FIG. 20A

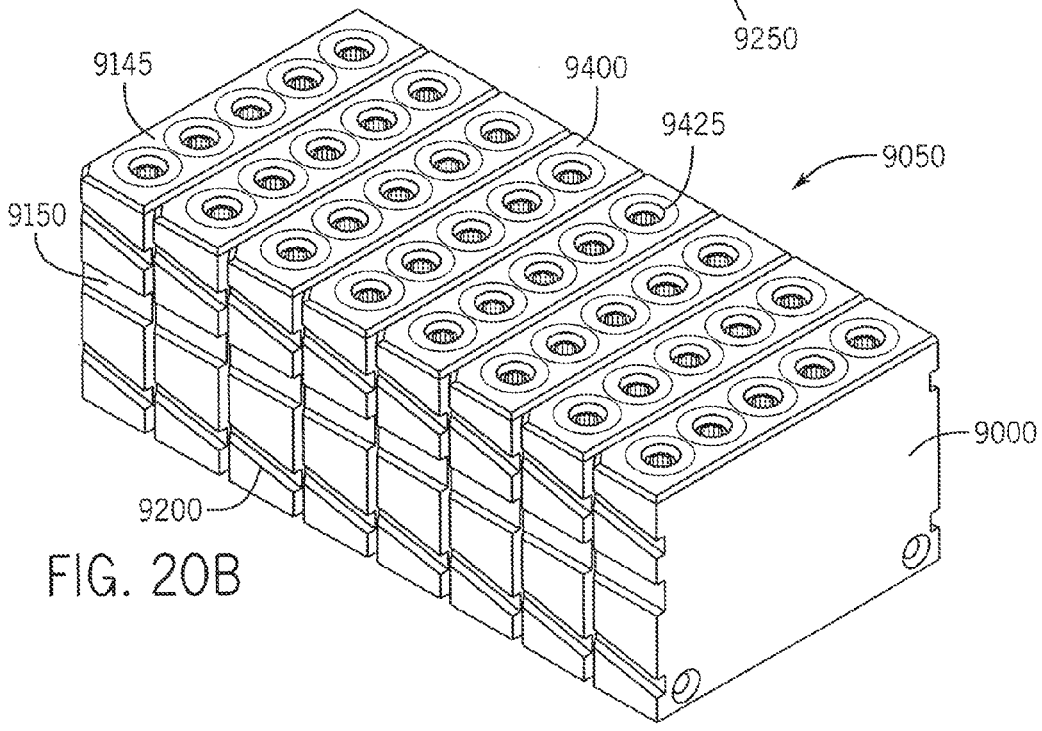

FIG. 20B

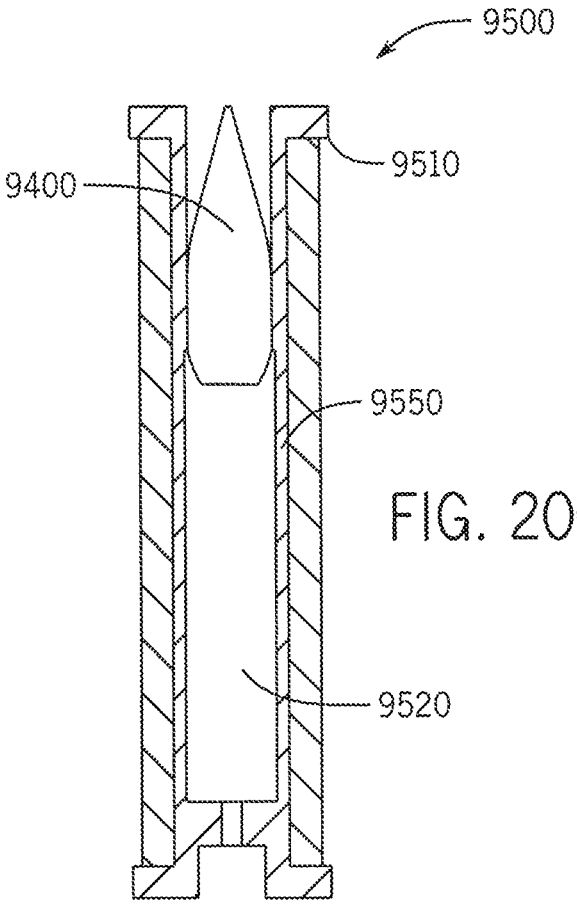

FIG. 20C

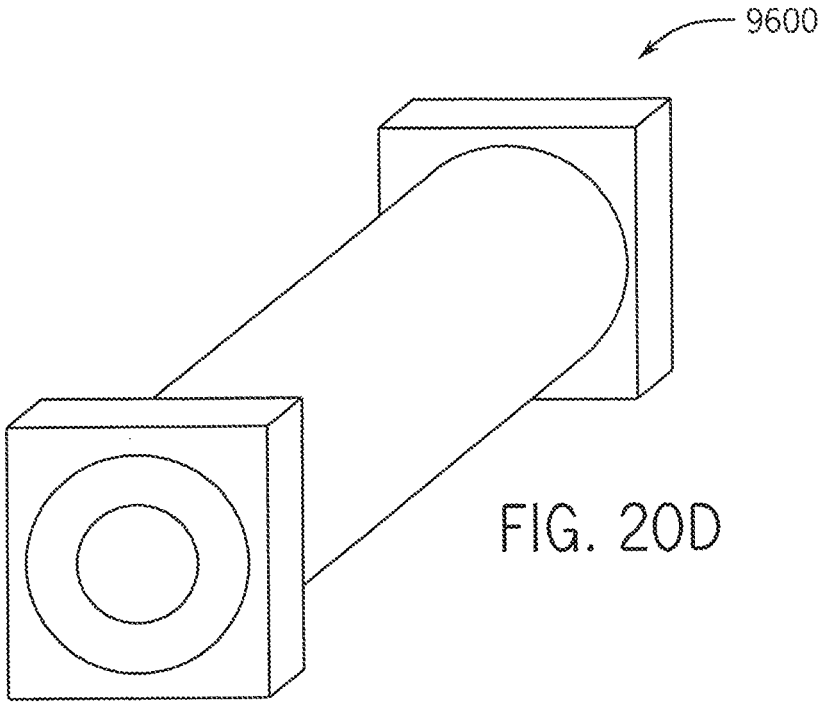

FIG. 20D

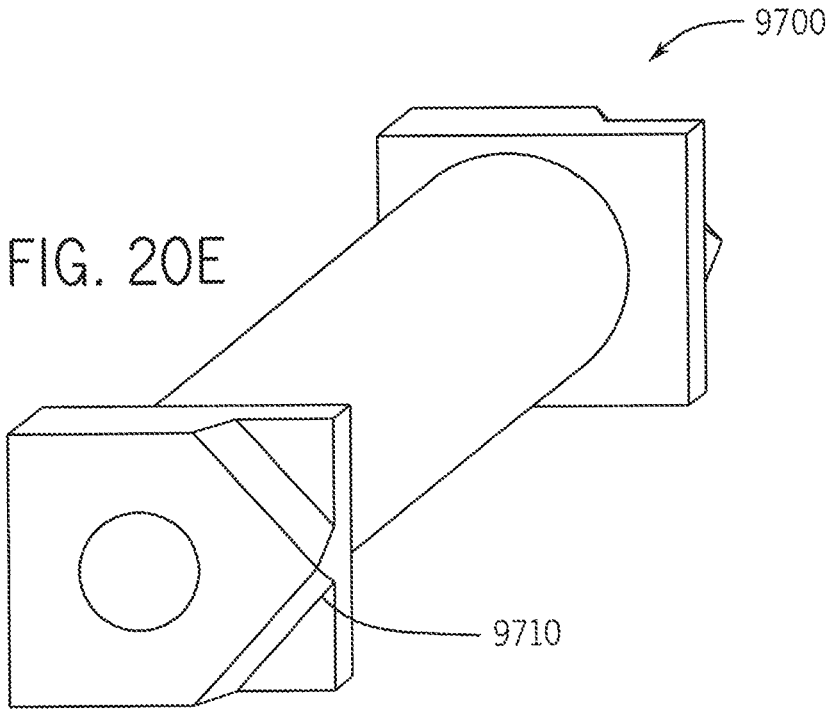

FIG. 20E

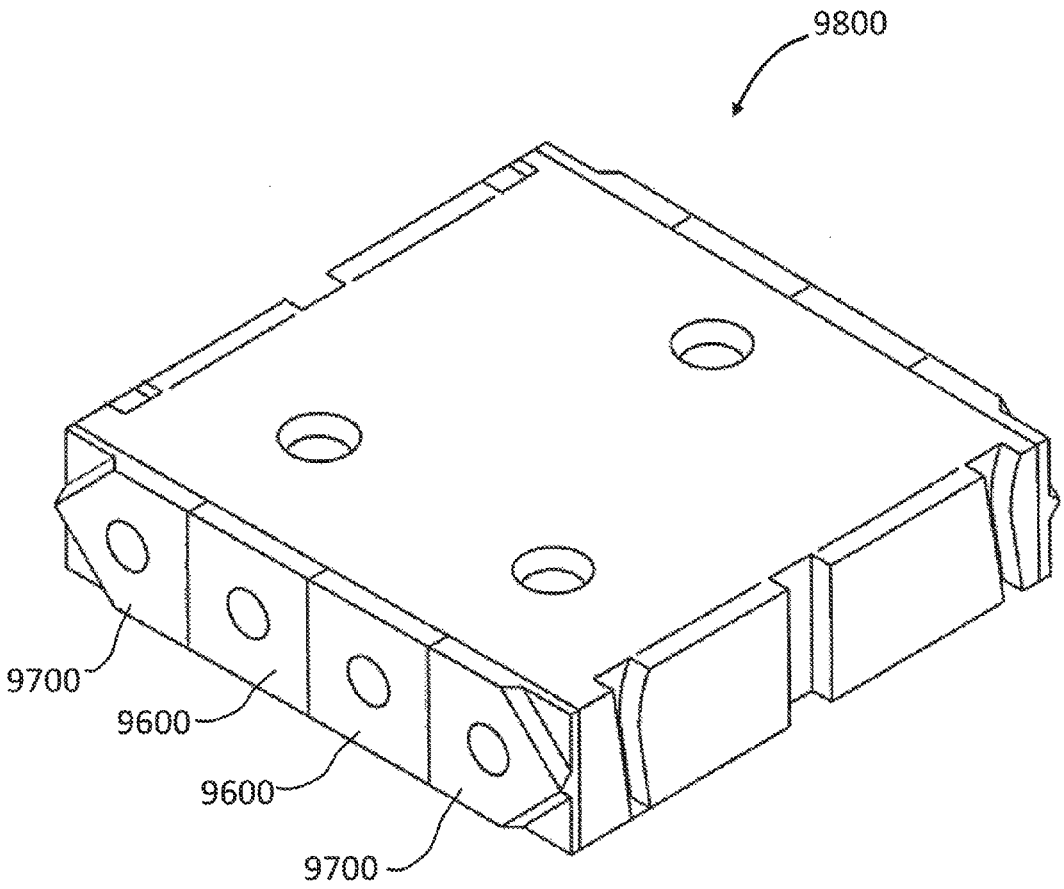

FIG. 20F

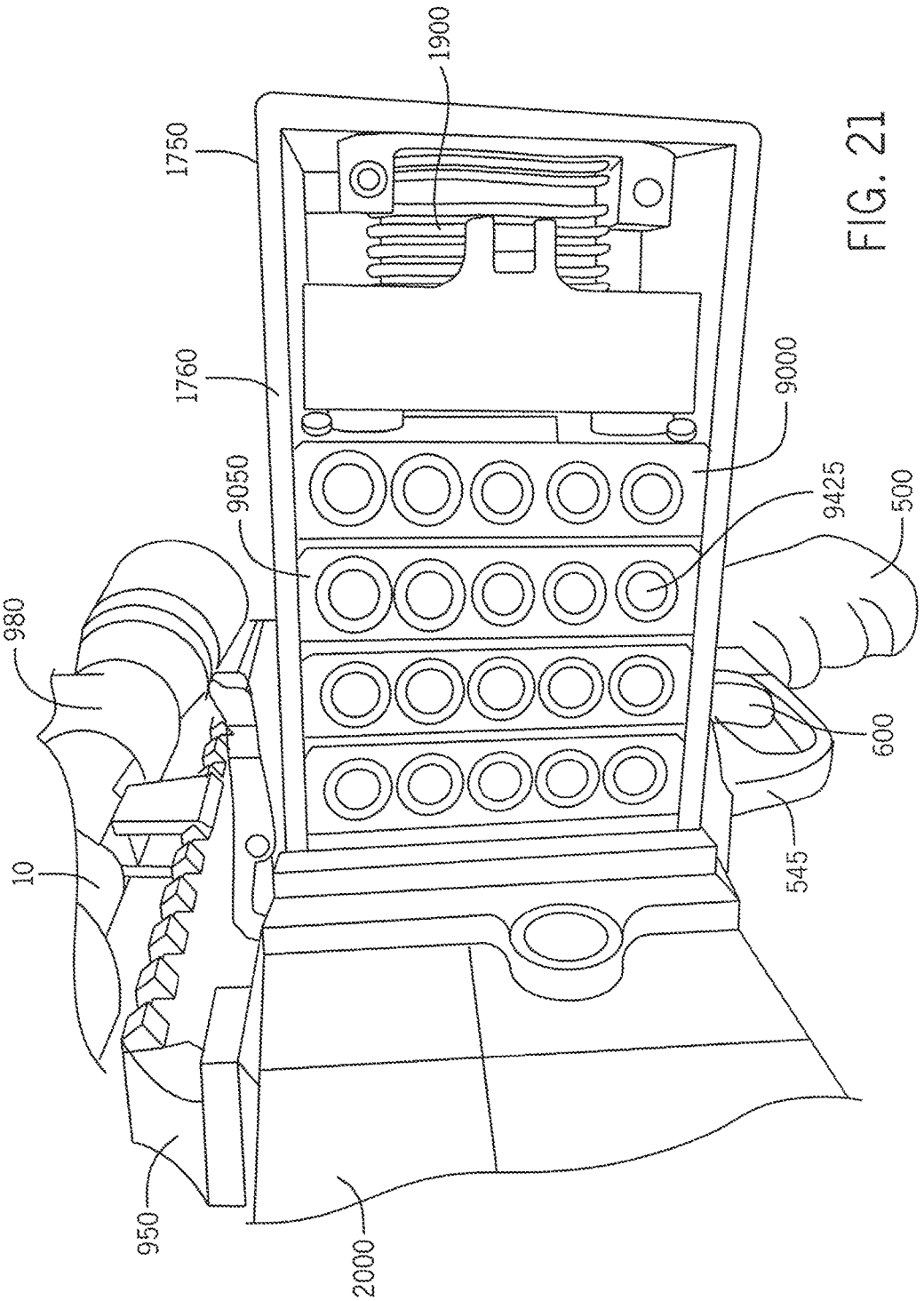

FIG. 21

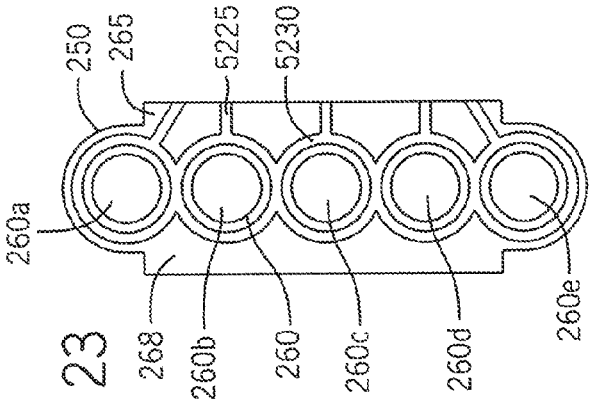

FIG. 23

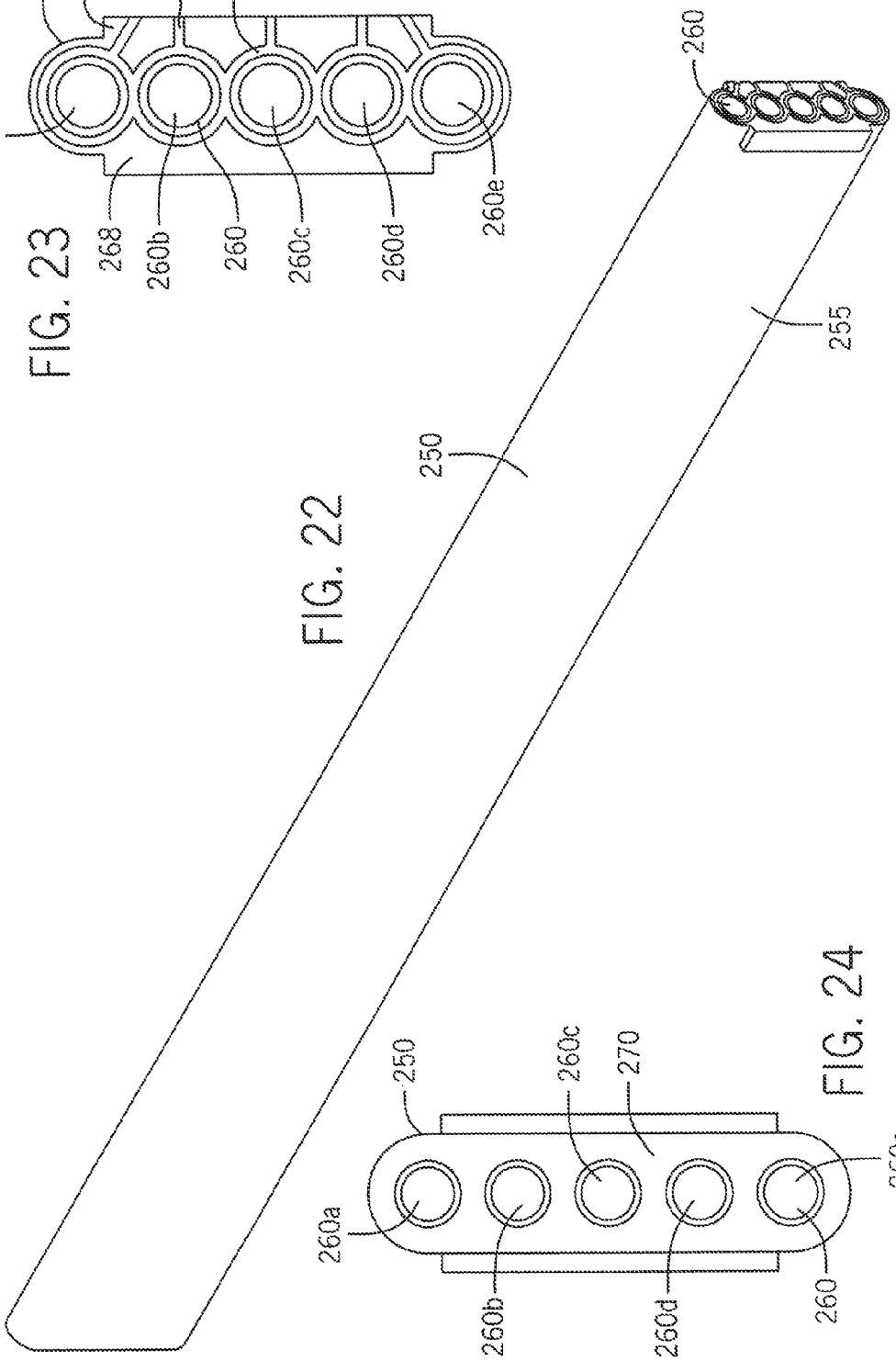

FIG. 22

FIG. 24

FIG. 25

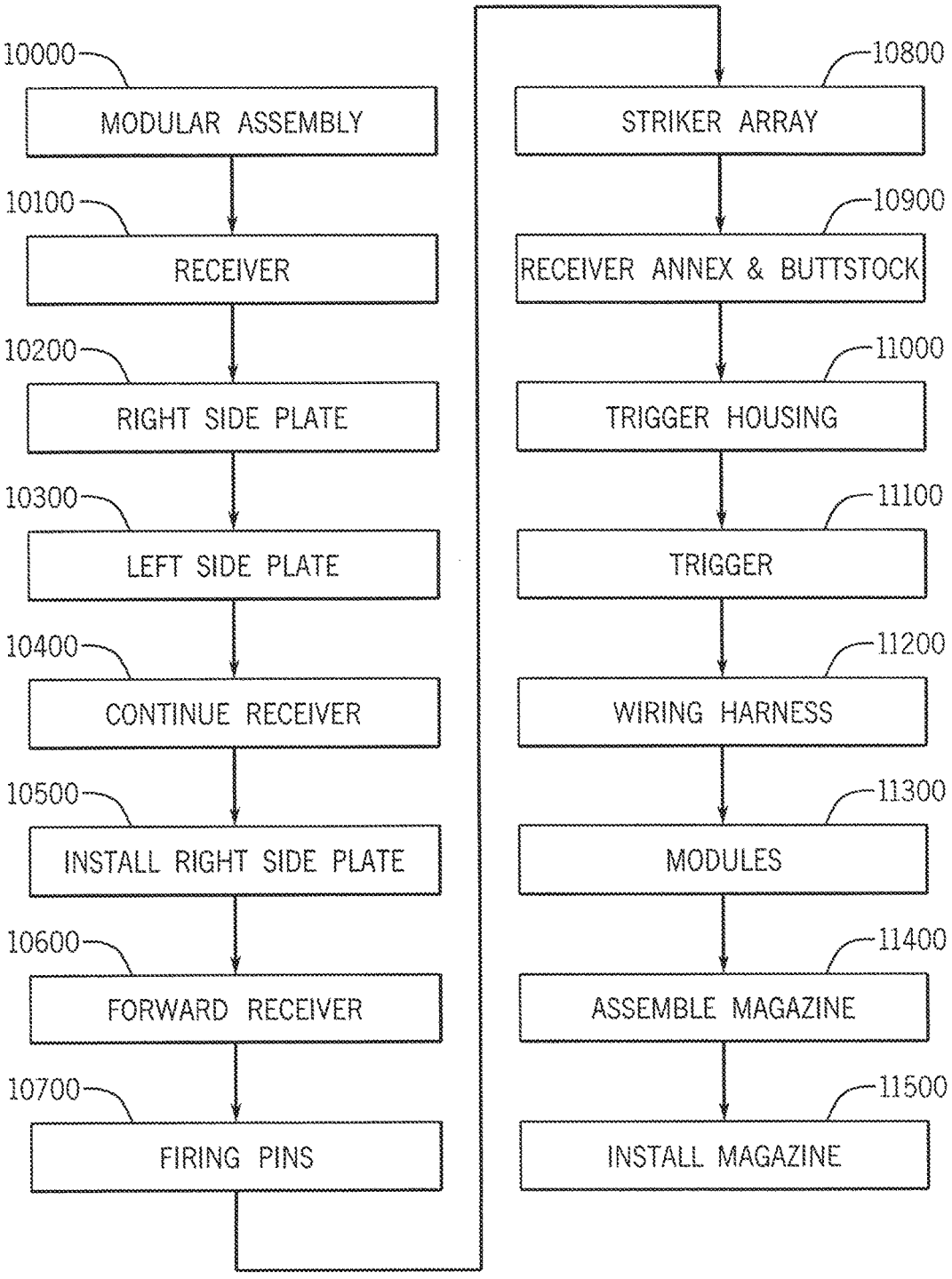
10000
MODULAR ASSEMBLY
10100
RECEIVER
10200
RIGHT SIDE PLATE
10300
LEFT SIDE PLATE
10400
CONTINUE RECEIVER
10500
INSTALL RIGHT SIDE PLATE
10600
FORWARD RECEIVER
10700
FIRING PINS
10800
STRIKER ARRAY
10900
RECEIVER ANNEX & BUTTSTOCK
11000
TRIGGER HOUSING
11100
TRIGGER
11200
WIRING HARNESS
11300
MODULES
11400
ASSEMBLE MAGAZINE
11500
INSTALL MAGAZINE

FIG. 26

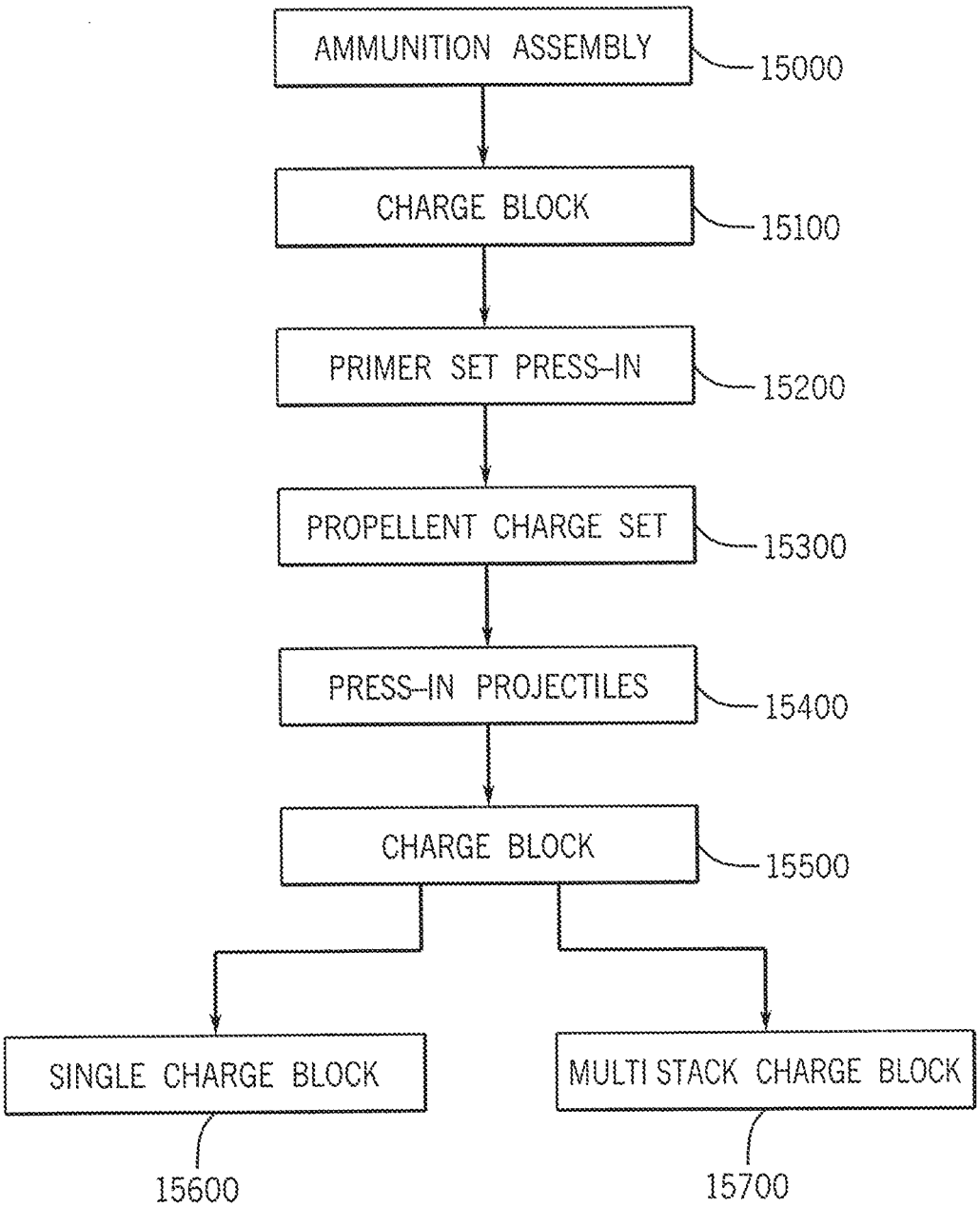
AMMUNITION ASSEMBLY
15000
CHARGE BLOCK
15100
PRIMER SET PRESS-IN
15200
PROPELLENT CHARGE SET
15300
PRESS-IN PROJECTILES
15400
CHARGE BLOCK
15500
SINGLE CHARGE BLOCK
15600
MULTI STACK CHARGE BLOCK
15700

FIG. 27

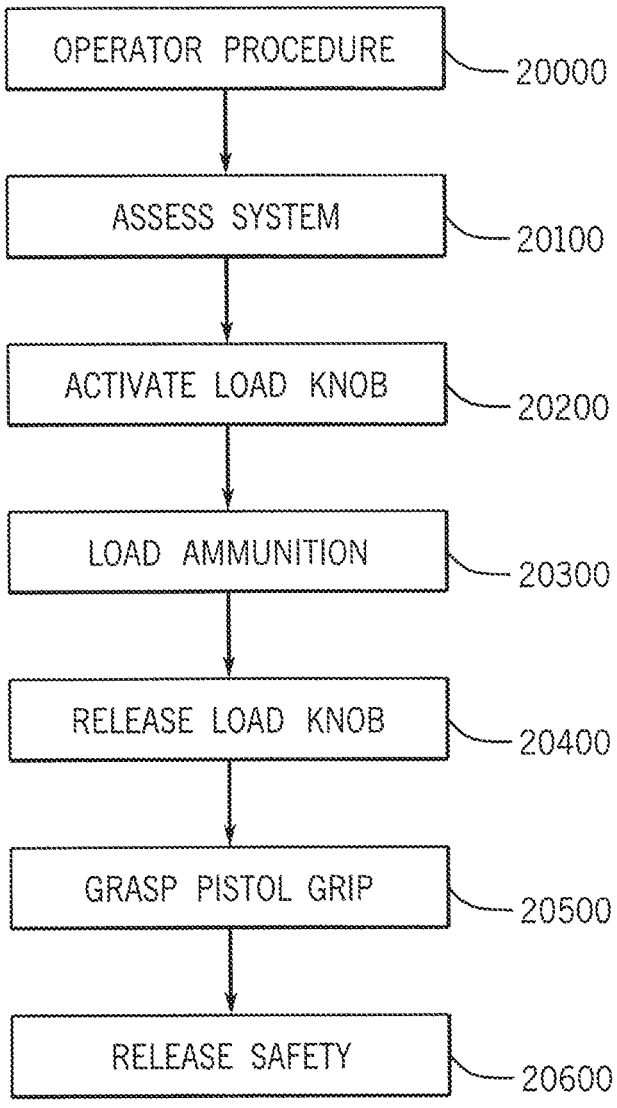
OPERATOR PROCEDURE
20000
ASSESS SYSTEM
20100
ACTIVATE LOAD KNOB
20200
LOAD AMMUNITION
20300
RELEASE LOAD KNOB
20400
GRASP PISTOL GRIP
20500
RELEASE SAFETY
20600

FIG. 28A

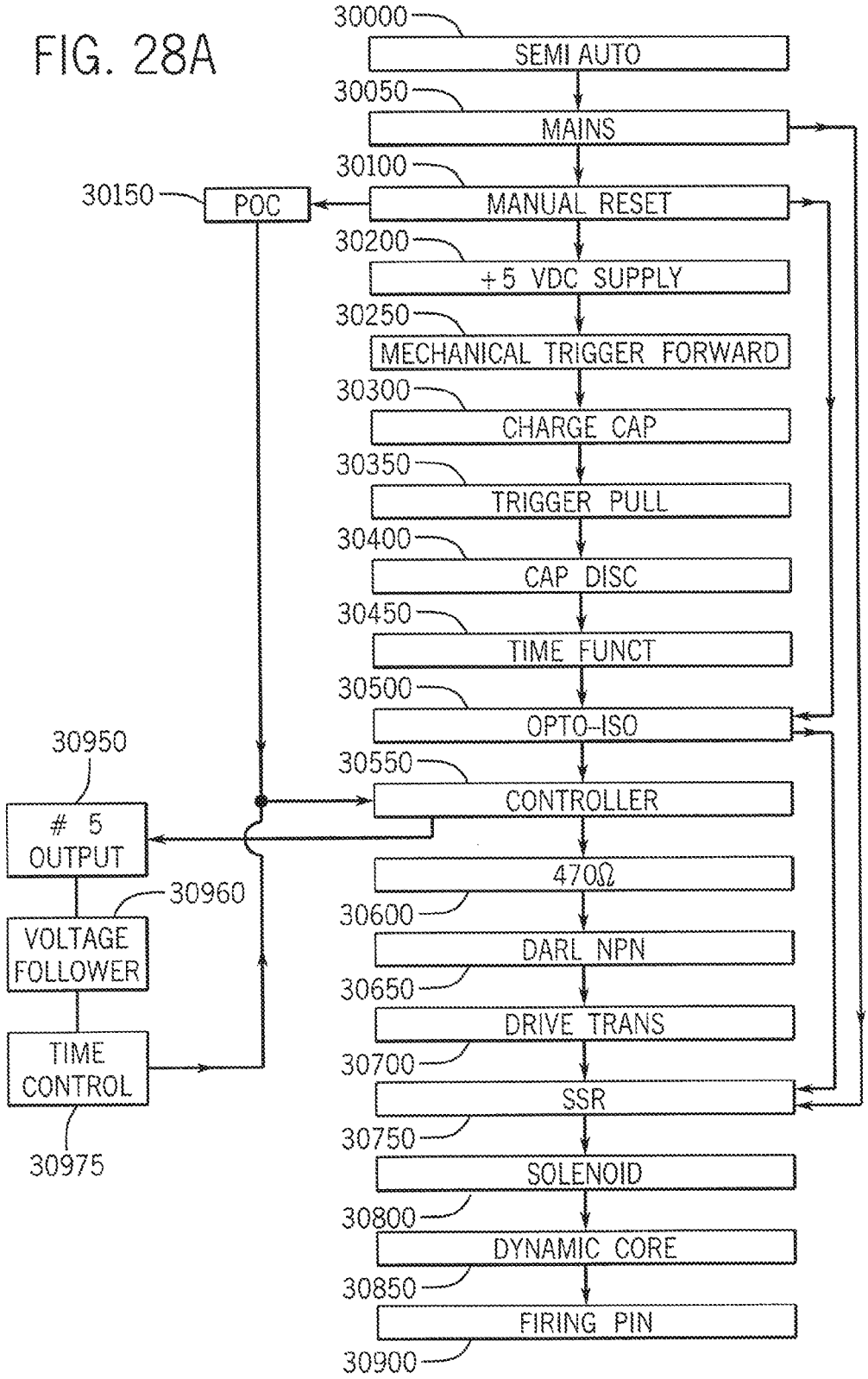
30000
SEMI AUTO
30050
MAINS
30100
MANUAL RESET
30150
POC
30200
+5 VDC SUPPLY
30250
MECHANICAL TRIGGER FORWARD
30300
CHARGE CAP
30350
TRIGGER PULL
30400
CAP DISC
30450
TIME FUNCT
30500
OPTO-ISO
30550
CONTROLLER
470Ω
30600
DARL NPN
30650
DRIVE TRANS
30700
SSR
30750
SOLENOID
30800
DYNAMIC CORE
30850
FIRING PIN
30900
30950
5 OUTPUT
30960
VOLTAGE FOLLOWER
TIME CONTROL
30975

FIG. 28B

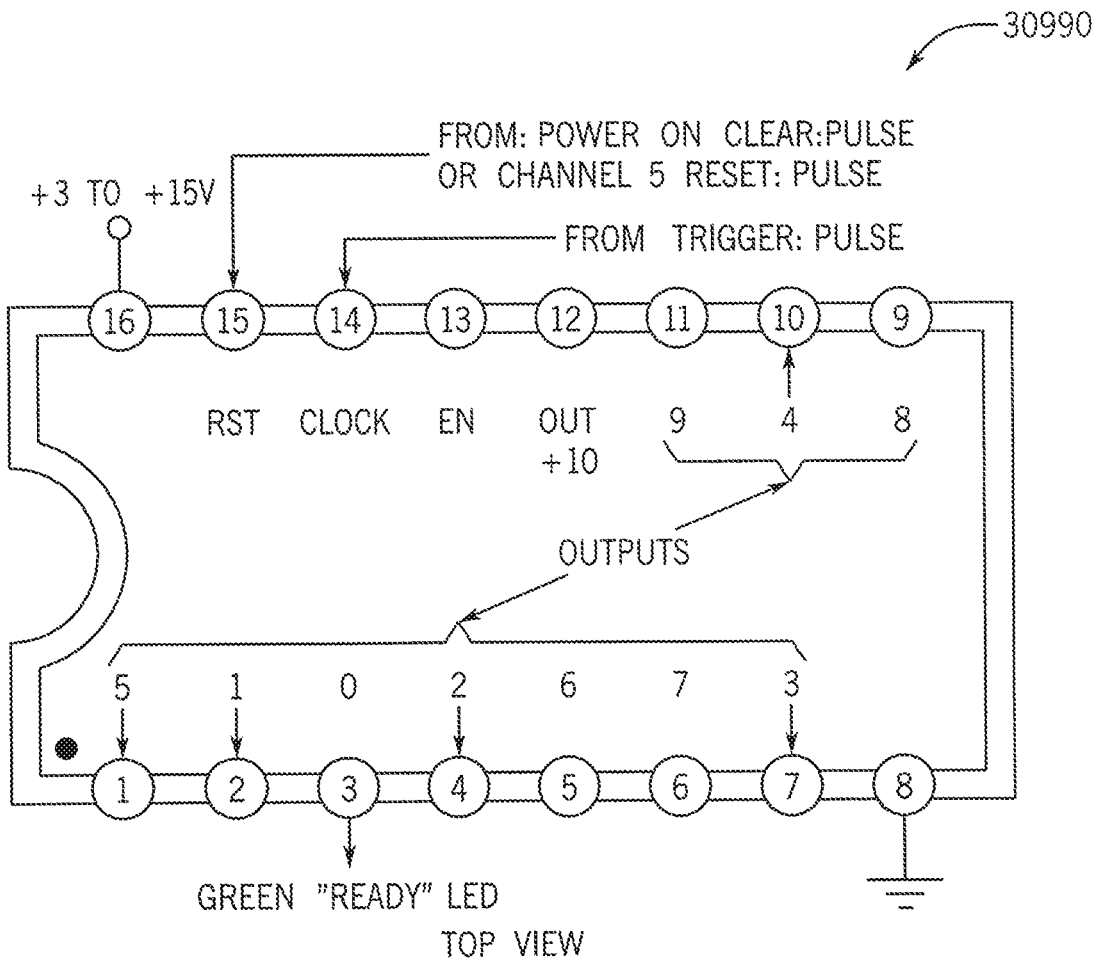
30990
FROM: POWER ON CLEAR:PULSE
OR CHANNEL 5 RESET: PULSE
+3 TO +15V
FROM TRIGGER: PULSE
16
15
14
13
12
11
10
9
RST
CLOCK
EN
OUT +10
9
4
8
OUTPUTS
5
1
0
2
6
7
3
1
2
3
4
5
6
7
8
GREEN "READY" LED
TOP VIEW

FIG. 29

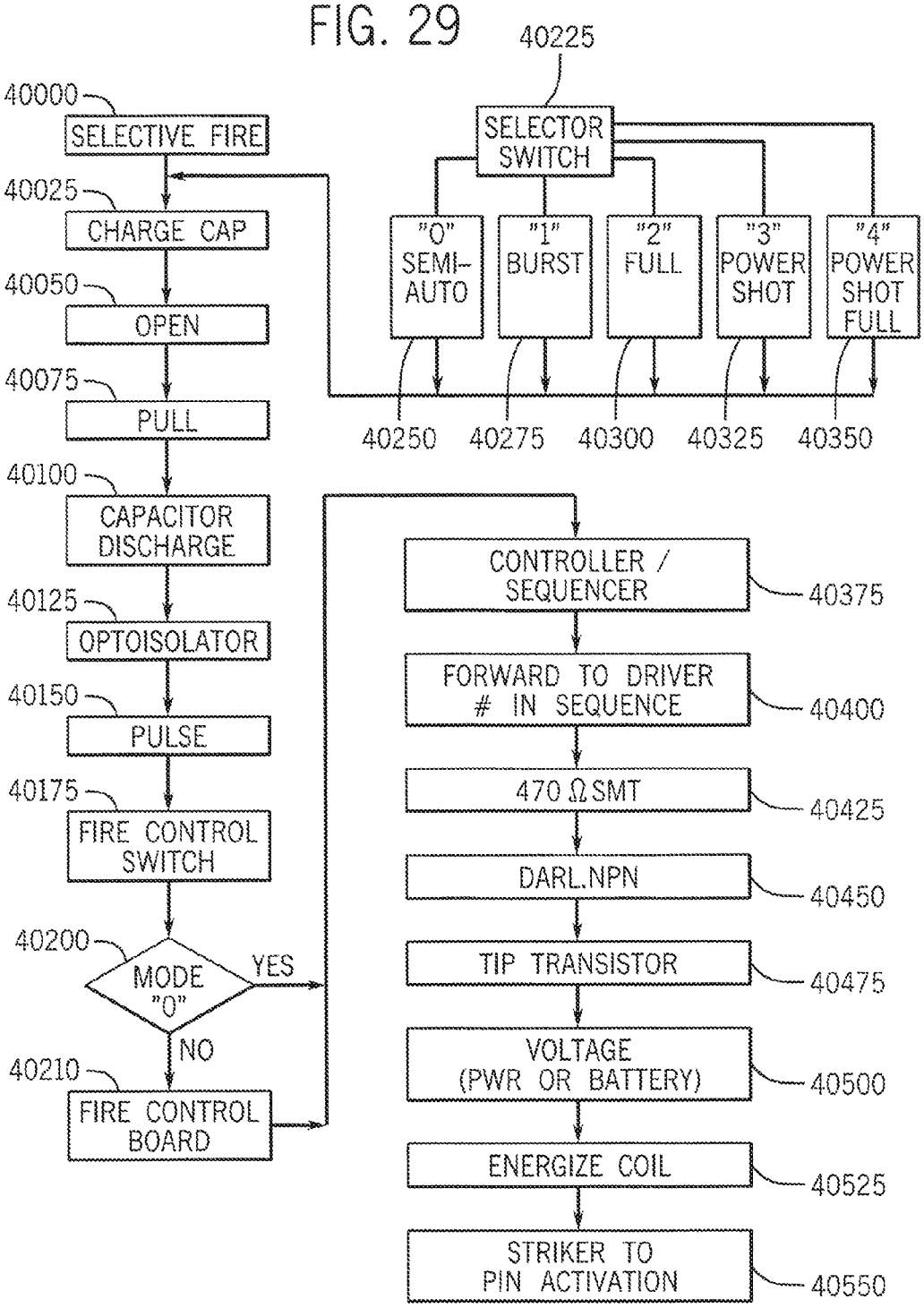
40000
SELECTIVE FIRE
40025
CHARGE CAP
40050
OPEN
40075
PULL
40100
CAPACITOR DISCHARGE
40125
OPTOISOLATOR
40150
PULSE
40175
FIRE CONTROL SWITCH
40200
MODE "0"
YES
NO
40210
FIRE CONTROL BOARD
40225
SELECTOR SWITCH
"0" SEMI-AUTO
"1" BURST
"2" FULL
"3" POWER SHOT
"4" POWER SHOT FULL
40250
40275
40300
40325
40350
CONTROLLER / SEQUENCER
40375
FORWARD TO DRIVER # IN SEQUENCE
40400
470 Ω SMT
40425
DARL.NPN
40450
TIP TRANSISTOR
40475
VOLTAGE (PWR OR BATTERY)
40500
ENERGIZE COIL
40525
STRIKER TO PIN ACTIVATION
40550

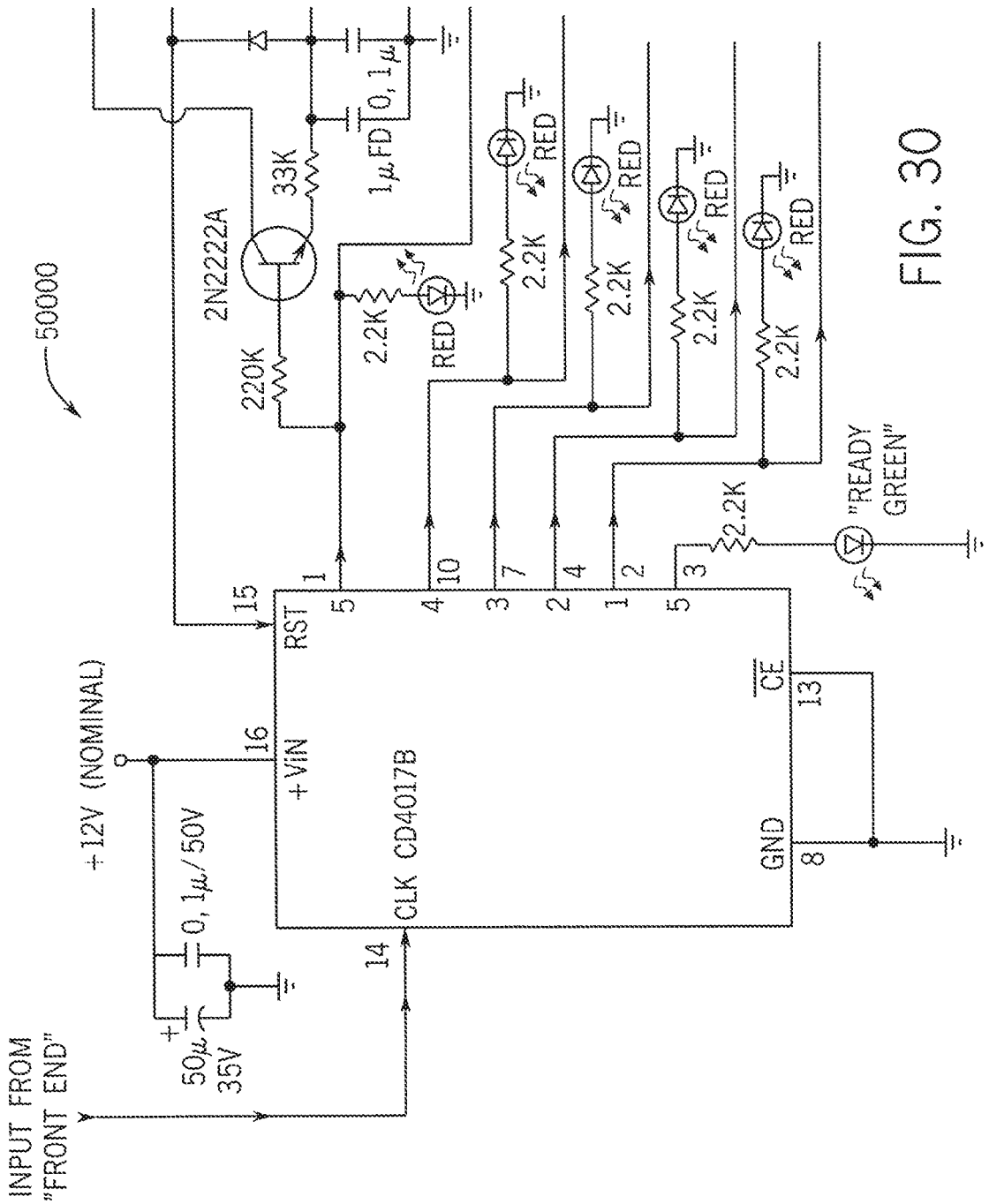
50000
INPUT FROM "FRONT END"
+12V (NOMINAL)
50μ 35V
0, 1μ/ 50V
+VIN
CLK
RST
CD4017B
GND
CE
2N2222A
33K
220K
1μFD
0, 1μ
2.2K
RED
"READY GREEN"

FIG. 30

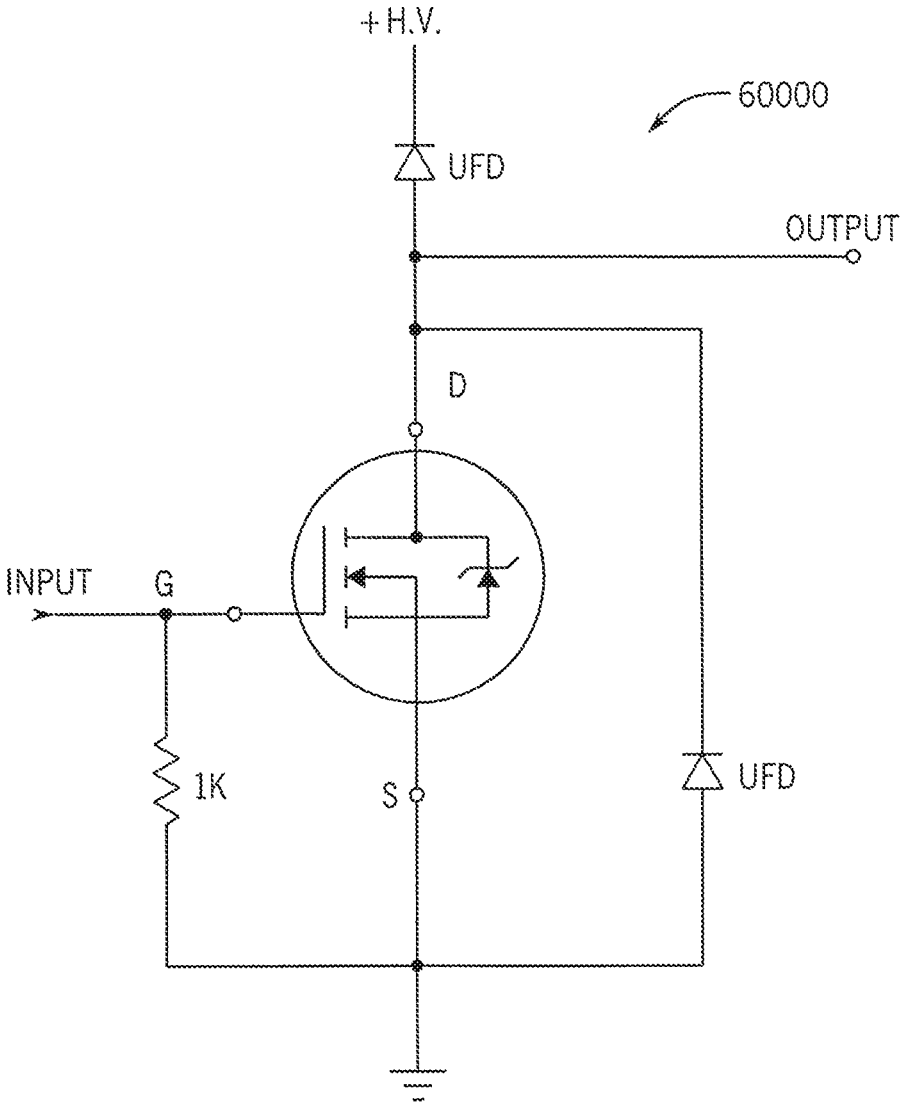

FIG. 31

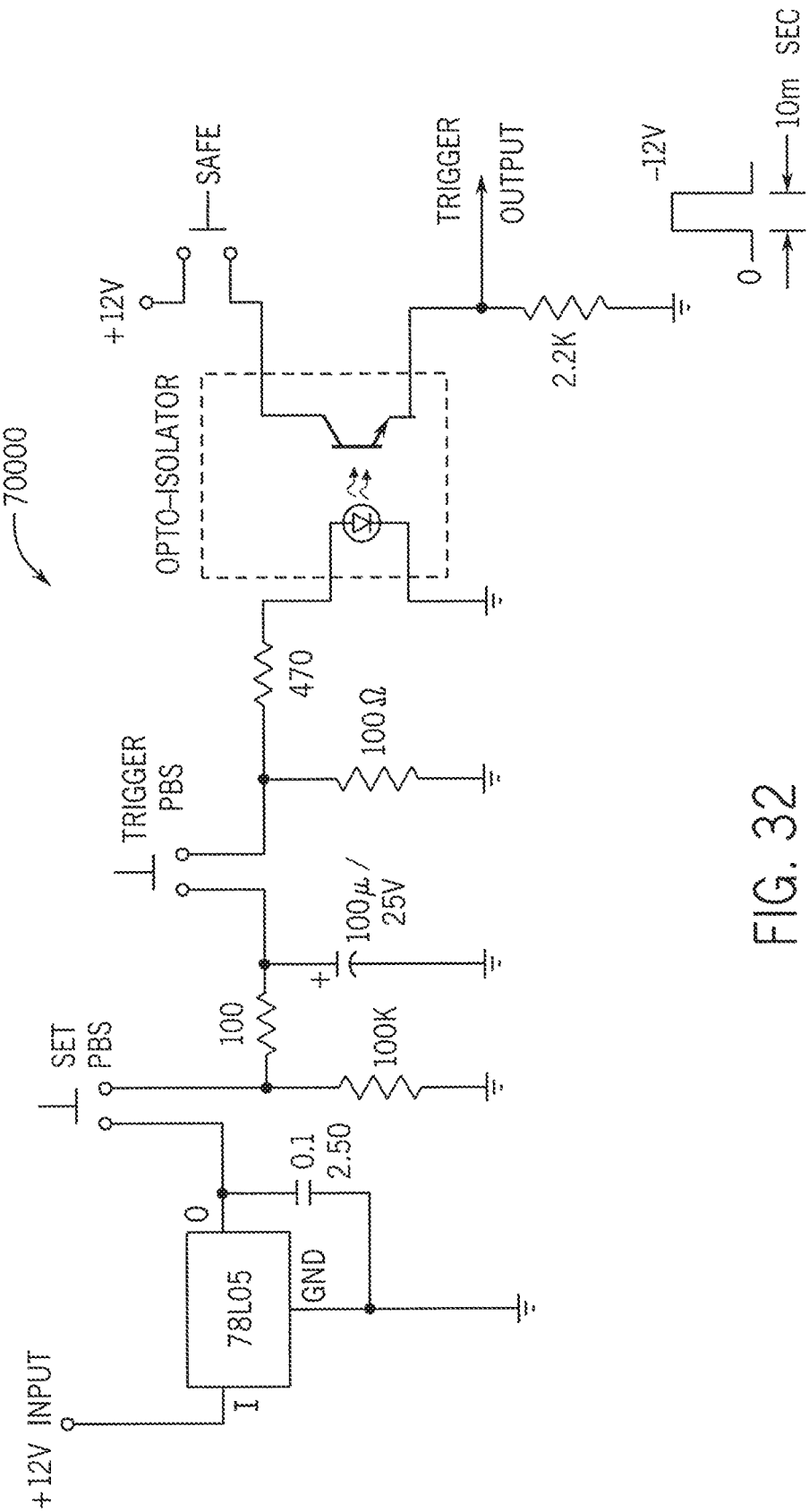
70000
+12V INPUT
78L05
I
O
GND
0.1
2.50
SET PBS
100
100K
TRIGGER PBS
100μ / 25V
470
100Ω
OPTO-ISOLATOR
+12V
SAFE
TRIGGER OUTPUT
2.2K
-12V
0
10m SEC

FIG. 32

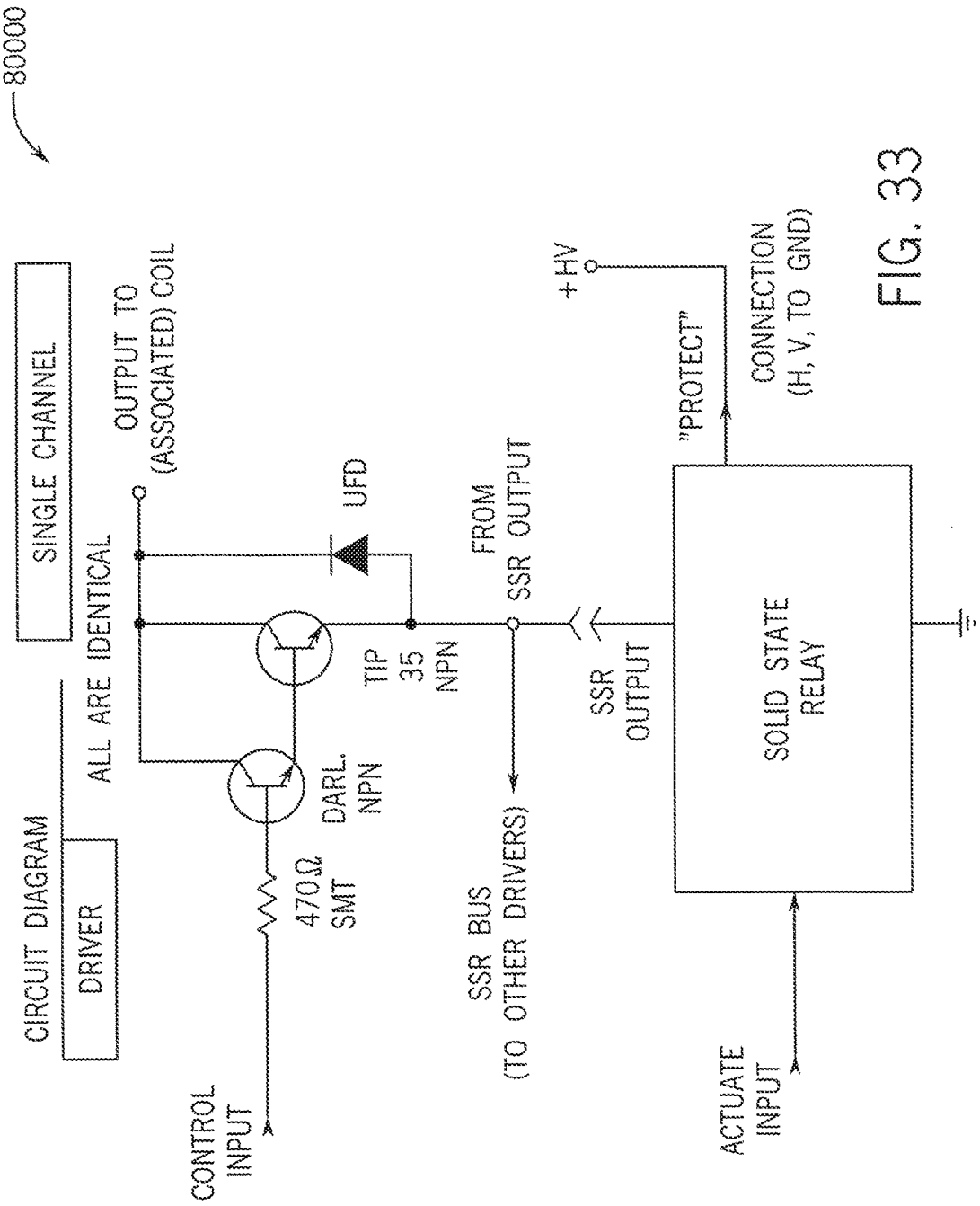
80000
CIRCUIT DIAGRAM
DRIVER
ALL ARE IDENTICAL
SINGLE CHANNEL
OUTPUT TO (ASSOCIATED) COIL
UFD
FROM SSR OUTPUT
+HV
"PROTECT"
CONNECTION (H, V, TO GND)
CONTROL INPUT
470Ω SMT
DARL. NPN
TIP 35 NPN
SSR BUS (TO OTHER DRIVERS)
SSR OUTPUT
SOLID STATE RELAY
ACTUATE INPUT

FIG. 33

FIREARM SYSTEM AND METHOD

BACKGROUND

Firearms have historically been designed with a single-bore barrel. This has been the case due in part to technical difficulty of boring a long straight hole through a piece of hard metal, and the problem of cutting or impressing a rifling pattern on the interior of the bore without affecting the trueness of the barrel and hence its accuracy potential. The number of variables involved in those processes is so large as to render the specialized field of barrel making as much an art as a science. That situational difficulty is compounded to near impossibility in the attempt to bore a second hole in the same metal piece, if both bores are to be straight and accurately aligned. For those reasons, accurate multi-bore barrels have never been successfully manufactured.

All successful battle rifle designs, from the time of the smooth-bore matchlock until the present day, have been of the single-bore, single-barrel type. These firearms have reached a high degree of refinement after centuries of development, and share the use of cartridge ammunition, which is a useful solution to the problem of how to quickly reload a barrel for firing. Cartridge ammunition is likewise highly refined after a long development. The modern battle rifle has resulted from the combination of a single barrel designed to be loaded with cartridge ammunition from the breech, a mechanism or "action" that inserts and replaces cartridges into the barrel, and a magazine that contains numerous cartridges.

Existing rapid-fire mechanisms require considerable energy to function. A heavy steel bolt must be quickly moved against a powerful spring. Relatively long and heavy cartridges must be inserted into deep chambers, and then rapidly removed. The total motion of the bolt for each shot can be 6-8 inches or more. At the same time, a firing hammer must be cocked against its own heavy spring, and then released by another linkage. All this back and forth consumes so much energy that the modern battle rifle emerged only after the invention of the gas operating system. The gas system provides the needed energy by using high pressure gas from the bore to move a piston or other mechanism which then moves the action. While ingenious, the gas action has its own problems.

An action powered by the high pressure and extremely hot gas produced by the propellant has the force needed to power a complex action. However, that same gas is contaminated with metal vapors and particulate matter that may foul the delicate inner workings of the action. This can result in jamming and other undesirable failures that require frequent field maintenance. Furthermore, the need to clean a weapon in the heat of battle may have fatal consequences.

Cartridge ammunition requires a chamber machined into the bore at the breech end of the barrel where the interior dimensions of the chamber closely match the exterior dimensions of the cartridge type chosen for the weapon. The weapon designer must select a cartridge type with ballistic characteristics approximating the desired performance of the intended weapon design, considering both the trajectory and terminal ballistics. The weapon must then be designed to accommodate the exact physical dimensions of the cartridge, including the standardized (SAMMI) maximum pressures created by the selected cartridge. This situation in turn imposes a set of parameters under the weapon design, such as general size and weight, material selection, magazine type, action type, barrel length, firing rate and magazine capacity. These factors, and others, have led to a design

convergence toward a popular basic layout of a single-bore barrel with a gas-operated action, a box magazine containing 30 cartridges or so, and .22 to .30 caliber cartridges of approximately 3,000 FPS velocity. These specifications are mostly a result of all the compromises required to achieve a practical design.

The role of cartridge ammunition in the functioning of the weapon is important in defining the limitations of a single bore design. The cartridge case not only contains propellant and other components, it also performs the critical function of sealing the breech during firing. When the propellant is ignited and pressure builds within the cartridge case, its walls are forced outward against the interior of the chamber and form an adequate seal as long as the pressure is sufficient to keep the case expanded. There is a period at the beginning and another at the end of the propellant burning cycle when the pressure is elevated but insufficient to form or maintain the seal. This results in hot gases flowing through the action and consequent fouling. This is not a minor detail because these weapons function in a sequential progression with each step dependent upon the successful completion of the previous step. Any failure in any step brings the entire process to a halt until the cause is ascertained and corrected.

A rate of fire adequate for combat consumes significant quantities of ammunition and can quickly overheat the weapon, which can result in jamming. The effective rate of sustained fire is a very important measurement of the combat capability of a weapon in practical use. A rate of fire restricted to avoid overheating or including cooling periods may be considered to be the effective rate of fire, which over a sustained period of operation will always be less than the maximum cyclic rate of the weapon (and in most cases considerably less). Because the effective rate of sustained fire is always less than the maximum cyclic rate of the weapon, the buildup of heat is the limiting factor in combat capability. The overheating problem is an unavoidable consequence of the basic design of the single-bore cartridge ammunition weapon type, and the reasons are straightforward. Much of the intense heat produced by the combustion of the propellant passes through the cartridge case and is absorbed by the walls of the chamber. Importantly, the heat is generated on the interior of chamber and bore and must be conducted through the heavy steel walls of the chamber and barrel before it can escape. Steel is a relatively poor conductor of heat and interior surfaces can overheat before significant exterior cooling can occur.

A rapid rate of fire adds heat much more quickly than can be dissipated by conduction or convection, raising the temperature of the chamber walls. The chamber can become hot enough to ignite fresh cartridges upon entry or soon after. The pre-ignition of the cartridge (also known as "cook offs") can result in cartridge feeding problems, and unintentional discharge of the weapon. With some designs, especially high cyclic-rate types, cook-offs can occur in as few as 150 rounds.

Overheating in ordinary single bore weapons is a limiting factor and an unsolved problem. The situation remains because it is the inevitable result of the basic design. For example, friction from the projectile and hot gas flow through the bore following discharge can add more heat to the barrel. The extreme heat generated within the cartridge upon firing is absorbed by the chamber then conducted to the rest of the barrel. The faster the firing rate and the more powerful the cartridge, the worse the situation becomes. The problem is acute in the chamber where most of the heat is concentrated. The chamber walls must be extra thick to maintain integrity when hot, and active cooling is not

effective when heat is added more rapidly than it can be conducted away. Further, the size, weight and complexity penalties of active cooling are not worth the results for light arms. Moreover, the high heat loads in the chamber of a single bore, sequential feeding cartridge ammunition firearm inevitably affects the functioning of the action. A chamber can become hot enough for the softer metal of a cartridge case to melt and adhere to the chamber wall, jamming the firearm.

In the attempt to improve the effective rate of sustained fire and address some of those issues, multi-barrel firearms have been designed and built by Gatling, General Electric and others. A set of parallel barrels with conventional integral chambers, fastened together and rotated (in modern designs by an electric motor) around a central axis, are fed with cartridge ammunition by a complex mechanism. Each barrel fires in its turn and not again until all the others have fired, thus dividing the duty cycle of each barrel by the number of barrels. The mechanism performs the loading, firing, and unloading operations in different barrels simultaneously as the set rotates. Misfires or defective ammunition can process through the system normally and not cause a stoppage. Such an arrangement improves the rate of sustained fire by integrating the firepower and ammunition capacity of several automatic firearms together into a single machine. Also integrated are much of the size, weight and complexity of those several firearms, a large heavy magazine, as well as the additional weight and complexity of the electric drive and control systems and their associated power supply.

A multi-bore firearm, with several bores within a single barrel, could potentially exhibit many of advantages of a multi-barrel design, while reducing the size, weight and complexity disadvantages. Moreover, a multi-bore firearm with a single, fixed barrel containing bores that are precisely and permanently aligned to one another would eliminate accuracy challenges arising from the difficulty of achieving and maintaining he alignment of multiple moving barrels to each other and to the gunsights; from non-uniform warpage of the various use-heated barrels; from the centripetal forces acting on the barrels at their mounting points in a direction perpendicular to their axes; and from the angular momentum conserved by a projectile exiting a rotating system. Multi-barrel systems are considered very accurate if the projectile dispersion angle is in the range of 5-8 mils, while a multi-bore system has shown a dispersion angle of <1 mil in field testing of a non-optimized prototype.

A firing pin and miniature electromagnetic striker for each charge with overall electronic fire control eliminates the need for a heavy and complex mechanical firing system, while the use of charge blocks eliminates the need for cartridge ammunition and the necessary integral chambers and heavy reciprocating action. Hot charge blocks are ejected once exhausted, removing excess heat from the firearm. The total heat load of the barrel is divided among the multiple bores, reducing wear and facilitating cooling. Without integral chambers or the need to load cartridge ammunition, barrel heat does not affect the function of a charge block firearm, preventing cook-offs and allowing for near-continuous operation.

The energy required to activate the miniature electromagnetic strikers, camshaft actuator and electronic fire control circuits is low enough to permit the use of a lightweight onboard power supply sufficient to allow extended operations, many thousands of discharges and energy to operate various electronic firearm accessories.

Cartridge ammunition must be loaded into magazines before it can be used in self-loading firearms. Long term storage of cartridges in magazines is not recommended as this can weaken the magazine spring, and allow the accumulation of foreign matter in the magazine, which cannot be effectively sealed. In order to have the ability to quickly reload the firearm, an operator typically pre-loads by hand numerous magazines to carry along with the firearm. Many also carry a container of loose cartridges to reload the magazines, if necessary. To exchange an exhausted or partly exhausted magazine, an operator must handle both if he wishes to reload the ejected magazine later. Charge block ammunition does not require a magazine for transportation or storage. Charge blocks can easily snap together to form stacks that may be carried as is. The magazine can remain attached to the firearm and be refilled at any point by retracting the load knob and inserting fresh charge blocks through the ejection port. An empty or partially empty magazine can be quickly refilled with a pre-assembled stack of the correct size; if a partial refill, any extras can be snapped off. Individual charge blocks may be loaded by the same method. Release the load knob and the firearm is in the ready condition. Charge blocks are sealed units and may be transported or stored indefinitely either individually or in stacks.

SUMMARY

Some embodiments of the invention include a firearm system comprising a receiver complex including a receiver coupled to a forward receiver, a feed port positioned between the receiver and the forward receiver, and a striker coil assembly positioned proximate the receiver including a plurality of strikers extending at least partially through a coil, and a barrel coupled to the forward receiver forming a breech.

In some embodiments, the firearm system includes a breech that comprises a plurality of side-by-side bores. Some embodiments include a barrel that comprises a plurality of side-by-side bores. In some embodiments, the barrel is interchangeable and comprises five side-by-side bores.

Some embodiments include a firearm system comprising a magazine coupled to the receiver complex adjacent the feedport. Further, the magazine is configured and arranged to simultaneously feed more than one dischargeable projectile into the feedport. In some embodiments, the magazine comprises at least one charge block comprising a plurality of dischargeable projectiles. In some embodiments, the charge block comprises five projectiles. In some embodiments of the invention, the charge block comprises a plurality of chambers, where each of the chambers are configured and arranged to house a unit of ammunition.

In some embodiments, the firearm system further comprises an action cam positioned in the receiver. The action cam comprises a single lobe extending the length of the cam, a plurality of firing pin clearance cuts, and at least one timing pin or lobe.

In some embodiments, the firearm system further comprises a recoil shield comprising a plurality of firing pin holes and positioned in the receiver and coupled to the action cam. Further, the firearm system further comprises a plurality of firing pins, wherein at least one of the plurality of firing pins is positioned at least partially within at least one of the plurality of firing pin clearance cuts. In some embodiments, least one of the plurality of firing pins extends through at least one of the plurality of firing pin holes.

Some embodiments include a firearm receiver comprising a receiver coupled to a forward receiver, a feed port positioned between the receiver and the forward receiver, and an action cam positioned in the receiver. The action cam comprises a single lobe extending the length of the cam and a plurality of firing pin clearance cuts. Further, the firearm receiver comprises a recoil shield positioned in the receiver and coupled to the action cam. The recoil shield comprises a plurality of firing pin holes. Further, the firearm receiver comprises a breech comprising a plurality of bores extending through a barrel.

In some further embodiments, the firearm receiver comprises a striker coil assembly positioned in the receiver complex proximate the receiver. The striker coil assembly includes a plurality of strikers each extending at least partially through a coil. In some other embodiments, the firearm receiver comprises a plurality of firing pins, where at least one of the plurality of firing pins is positioned at least partially within at least one of the plurality of firing pin clearance cuts. In some embodiments, at least one of the plurality of firing pins is positioned at least partially within at least one of the plurality of firing pin holes. In other embodiments, at least one of the plurality of strikers is positioned in alignment with at least one of the plurality of firing pins.

Some embodiments include a firearm system assembly method comprising providing a receiver complex comprising a receiver and a forward receiver, forming a feed port positioned between the receiver and the forward receiver, and forming a barrel comprising a plurality of substantially parallel bores. Further, the method includes coupling the barrel to the forward receiver and forming a breech including the plurality of bores. The method includes providing an action cam comprising a single lobe extending the length of the cam and a plurality of firing pin clearance cuts. The method further includes positioning the action cam in the receiver and coupling to a recoil shield, where the recoil shield comprises a plurality of firing pin holes. The method further includes providing a plurality of firing pins, where at least one of the plurality of firing pins is positioned at least partially within at least one of the plurality of firing pin clearance cuts and at least one of the plurality of firing pin holes. The method further includes assembling a striker coil assembly proximate the receiver. The striker coil assembly includes a plurality of strikers each extending through a coil, where at least one of the plurality of strikers is positioned in alignment with at least one of the plurality of firing pins.

In some embodiments, the method further comprises coupling a magazine to the receiver complex adjacent the feedport, where the magazine is configured and arranged to substantially simultaneously feed more than one dischargeable projectile into the feedport by feeding a single charge block comprising a plurality of projectiles.

Some other embodiments include a firearm ammunition assembly comprising a first charge block including a projectile end and a primer end, where the charge block includes a plurality of chambers extending from the projectile end to the primer end. The assembly comprises at least one of a guide rail slot and a feed groove, at least one castellation configured to couple the first charge block with a second charge block, and a plurality of projectiles positioned within the plurality of chambers.

In some further embodiments, the ammunition assembly includes a plurality of chambers that are substantially aligned along an axis positioned substantially perpendicular to an axis along which the first charge block is configured to be fed into a firearm.

DESCRIPTION OF THE DRAWINGS

FIG. **1** illustrates a side view of a firearm system in accordance with some embodiments of the invention.

FIG. **2** illustrates a bottom view of a firearm system in accordance with some embodiments of the invention.

FIG. **3** illustrates side view opposite to the side view shown in FIG. **1** in accordance with some embodiments of the invention.

FIG. **4** illustrates an exploded assembly view of a firearm system in accordance with some embodiments of the invention.

FIG. **5** illustrates an internal side view of a buttstock of the firearm system shown in FIGS. **1-3** showing a close-up of a driver board in accordance with some embodiments of the invention.

FIG. **6** illustrates a side view of a rear portion of the firearm system of FIGS. **1-3** including an internal view of the buttstock from an opposite side than shown in FIG. **5** showing a close-up of a trigger board in accordance with some embodiments of the invention.

FIG. **7** illustrates a trigger region view of a firearm system in accordance with some embodiments of the invention.

FIG. **8** illustrates a trigger region view of a firearm system illustrating a trigger pull in accordance with some embodiments of the invention.

FIG. **9**A illustrates an exploded assembly view of a main receiver frame and action in accordance with some embodiments of the invention.

FIG. **9**B illustrates a striker coil assembly including firing pins in accordance with some embodiments of the invention.

FIG. **10**A illustrates a main receiver frame and action cam in accordance with some embodiments of the invention.

FIG. **10**B illustrates a main receiver frame with recoil shield removed in accordance with some embodiments of the invention

FIG. **10**C illustrates a main receiver frame with recoil shield and action cam removed in accordance with some embodiments of the invention.

FIG. **10**D illustrates a main receiver frame with recoil shield, action cam, and bushing removed in accordance with some embodiments of the invention.

FIG. **10**E illustrates a perspective view of an action cam in accordance with some embodiments of the invention.

FIG. **10**F illustrates a bottom view of an action cam in accordance with some embodiments of the invention.

FIG. **10**G illustrates a front view of an action cam in accordance with some embodiments of the invention.

FIG. **10**H illustrates a bushing side view an action cam in accordance with some embodiments of the invention.

FIG. **10**I illustrates an end view of an action cam in accordance with some embodiments of the invention.

FIG. **10**J illustrates a perspective view of a bushing in accordance with some embodiments of the invention.

FIG. **10**K illustrates a perspective view of a feed control carriage in accordance with some embodiments of the invention.

FIG. **11**A illustrates a rear perspective view of recoil shield with firing pins in accordance with some embodiments of the invention.

FIG. **11**B illustrates a front perspective view of recoil shield with firing pins in accordance with some embodiments of the invention.

FIG. **12** illustrates a perspective view of the receive complex showing the recoil face region of the firearm system in accordance with some embodiments of the invention.

FIG. **13**A illustrates a side view of a receiver annex region of the firearm system in accordance with some embodiments of the invention.

FIG. **13**B illustrates an internal view of a receiver annex region of the firearm system in accordance with some embodiments of the invention.

FIG. **14** shows the breech region of the firearm system in accordance with some embodiments of the invention

FIG. **15** shows the feedport region of the receiver complex of the firearm system in accordance with some embodiments of the invention.

FIG. **16** illustrates a view of the magazine and feed control portion of the firearm showing internal action in accordance with some embodiments of the invention.

FIG. **17** illustrates a side view of a magazine showing an internal view with charge blocks in position in accordance with some embodiments of the invention.

FIG. **18**A illustrates a perspective view of a magazine in accordance with some embodiments of the invention.

FIG. **18**B illustrates a side view of a magazine in accordance with some embodiments of the invention.

FIG. **18**C illustrates a perspective view of a magazine in accordance with some embodiments of the invention.

FIG. **19** illustrates a perspective view of a charge block in accordance with some embodiments of the invention.

FIG. **20**A illustrates a rear-side perspective view of a stack of charge blocks in accordance with some embodiments of the invention.

FIG. **20**B illustrates a front-side perspective view of a stack of charge blocks in accordance with some embodiments of the invention.

FIG. **20**C illustrates a cross-sectional view of a bobbin of a charge block according to one embodiment of the invention.

FIG. **20**D illustrates a perspective view of a bobbin of a charge block according to one embodiment of the invention.

FIG. **20**E illustrates a perspective view of a bobbin of a charge block according to another embodiment of the invention.

FIG. **20**F is a perspective view of a charge block assembled using the bobbins of FIGS. **20**D-**20**E in accordance with some embodiments of the invention.

FIG. **21** illustrates partially loaded magazine installed into the firearm system in accordance with some embodiments of the invention.

FIG. **22** illustrates a barrel of the firearm system in accordance with some embodiments of the invention.

FIG. **23** illustrates a breech of the barrel of FIG. **22** in accordance with some embodiments of the invention.

FIG. **24** illustrates an end of the barrel of FIG. **22** including a muzzle in accordance with some embodiments of the invention.

FIG. **25** illustrates an assembly readiness process for the firearm system of FIGS. **1-3** in accordance with some embodiments of the invention.

FIG. **26** illustrates an ammunition assembly process in accordance with some embodiments of the invention.

FIG. **27** illustrates a firearm start up and readiness to fire procedure in accordance with some embodiments of the invention.

FIG. **28**A illustrates a semi-automatic operational process of the firearm system of FIGS. **1-3** in accordance with some embodiments of the invention.

FIG. **28**B shows a schematic of decade counter **30990** used in accordance with some embodiments of the invention.

FIG. **29** illustrates a selective fire operational process of the firearm system of FIGS. **1-3** in accordance with some embodiments of the invention.

FIG. **30** illustrates a schematic of a logic control circuit of the firearm system of FIGS. **1-3** in accordance with some embodiments of the invention.

FIG. **31** illustrates a schematic of a solid-state relay control circuit of the firearm system of FIGS. **1-3** in accordance with some embodiments of the invention.

FIG. **32** illustrates a schematic of a trigger control circuit of the firearm system of FIGS. **1-3** in accordance with some embodiments of the invention.

FIG. **33** illustrates a schematic of a driver control circuit of the firearm system of FIGS. **1-3** in accordance with some embodiments of the invention.

DETAILED DESCRIPTION

Before any embodiments of the invention are explained in detail, it is to be understood that the invention is not limited in its application to the details of construction and the arrangement of components set forth in the following description or illustrated in the following drawings. The invention is capable of other embodiments and of being practiced or of being carried out in various ways. Also, it is to be understood that the phraseology and terminology used herein is for the purpose of description and should not be regarded as limiting. The use of "including," "comprising," or "having" and variations thereof herein is meant to encompass the items listed thereafter and equivalents thereof as well as additional items. Unless specified or limited otherwise, the terms "mounted," "connected," "supported," and "coupled" and variations thereof are used broadly and encompass both direct and indirect mountings, connections, supports, and couplings. Further, "connected" and "coupled" are not restricted to physical or mechanical connections or couplings.

The following discussion is presented to enable a person skilled in the art to make and use embodiments of the invention. Various modifications to the illustrated embodiments will be readily apparent to those skilled in the art, and the generic principles herein can be applied to other embodiments and applications without departing from embodiments of the invention. Thus, embodiments of the invention are not intended to be limited to embodiments shown, but are to be accorded the widest scope consistent with the principles and features disclosed herein. The following detailed description is to be read with reference to the figures, in which like elements in different figures have like reference numerals. The figures, which are not necessarily to scale, depict selected embodiments and are not intended to limit the scope of embodiments of the invention. Skilled artisans will recognize the examples provided herein have many useful alternatives that fall within the scope of embodiments of the invention.

FIGS. **1-3** illustrate several representative views of a firearm system **10** in accordance with various embodiments of the invention. As shown, the firearm system **10** can comprise numerous components, assemblies and sub-assemblies including components dedicated to loading ammunition, and components dedicated to discharging the loaded ammunition under the control of an operator. Most of the major components of the firearm system **10** are modular and therefore can be readily interchanged. This interchangeability and modularity can enable operators to customize the firearm system **10** for various specific tactical environments. More specifically, FIG. **1** illustrates a side view of a firearm

system **10**, FIG. **2** illustrates a bottom view of a firearm system **10**, and FIG. **3** illustrates side view opposite to the side view shown in FIG. **1** in accordance with some embodiments of the invention. In some embodiments, the firearm system **10** can comprise a receiver complex **2000** that comprises a receiver **4000** coupled to and integrated with a receiver annex **5000**. At the rear end (operator end) of the firearm system **10**, a buttstock **1100** can be coupled to the receiver complex **2000** using a buttstock adapter **515** coupled to the receiver annex **5000**. At the opposite end (the front end) of the firearm system **10** (i.e., extending away from the operator at the rear end) the firearm system **10** can include an interchangeable barrel **250** coupled to a forward receiver **300** coupled with at least one shoulder bolt **325**, which is coupled to and integrated with the receiver **4000**.

Beginning from the rear of the firearm system **10**, the buttstock **1100** can be used primarily to support the firearm system **10** during use. The buttstock **1100** can also provide a convenient and mechanically robust location to house various components of the firearm system **10**. For example, in some embodiments of the invention, the firearm system **10** can comprise an onboard power source such as a conventional battery (not shown). In some embodiments, a battery housing stock tube **1300** can be used to store at least one battery for providing power to at least a portion of the firearm system **10**. As shown in FIGS. **1** and **3**, in some embodiments, the battery housing stock tube **1300** can extend from a buttstock adapter **515** at one end of the firearm system **10** generally parallel with the barrel **250** at the other end of the firearm system **10**.

In some embodiments, the battery housing stock tube **1300** can be positioned between the buttstock adapter **515** and the end of the buttstock **1100** comprising a butt plate **1325** coupled to a butt pad **1335**. The butt plate **1325** coupled to a butt pad **1335** can serve to cover sensitive portions of the firearm system **10**, while providing a contoured shape for comfortable and safe handling of the firearm system **10**. In some embodiments of the invention, the battery housing stock tube **1300** can be coupled to an electronic chassis **1200**.

In some embodiments of the invention, the electronic chassis **1200** can support and house various electronics and control circuits used for operating and controlling the firearm system **10**. In some embodiments, the electronic chassis **1200** can extend from the buttstock adapter **515** bounded by the battery housing stock tube **1300** on one side and the butt plate **1325** and butt pad **1335** on the opposite side. In some embodiments, the buttstock **1100** can include an electronics bay **1250** supported by the electronic chassis **1200**, with electronic bay removable cover **1265** on one side of the buttstock **1100**, and a driver cover **1275** on the opposite side of the firearm system **10**.

Some embodiments of the invention include various mechanical and electro-mechanical components to enable an operator to control the firearm system **10**. In some embodiments, the operator can interface with and actuate one or more mechanical and electro-mechanical components to discharge ammunition from the firearm system **10**. For example, in some embodiments of the invention, the firearm system **10** can be configured to discharge ammunition using an electro-mechanical trigger **600**. As shown in at least FIGS. **1** and **3**, in some embodiments, the firearm system **10** can include a trigger **600** coupled to and extending from the receiver complex **2000**. For example, in some embodiments of the invention, the trigger **600** can be positioned below the receiver complex **2000** proximate the receiver annex **5000**. In order for an operator to support, aim, and maintain control of the firearm system **10**, some embodiments include an interchangeable pistol grip. For example, in some embodiments, a pistol grip **500** can be positioned proximate the receiver annex **5000**, and positioned coupled to and extending from the trigger **600** via the trigger housing **545**. In some embodiments, an operator can exchange the pistol grip **500** (e.g., to customize the size and shape of the pistol grip **500** based on size requirements of the operator, or the field of use of the firearm system **10**). In some embodiments, the pistol grip **500** can be customized to the operator. For example, in some embodiments, the pistol grip **500** can comprise one or more contours for engaging the operator's hand and fingers.

In some embodiments of the invention, the firearm system **10** can comprise various supports and coupling points for various adjustable modular components and accessories. For example, in some embodiments, the firearm system **10** can comprise a forestock Picatinny rail **850** that can be used to mount various accessories, including, but not limited to weapon lights, laser range finders, vision optics, scopes, and cameras, etc. As illustrated in FIGS. **1** and **3**, in some embodiments, the forestock Picatinny rail **850** can be mounted to the receiver complex **2000**. In some embodiments of the invention, the forestock Picatinny rail **850** can be coupled to the receiver complex **2000** extending proximate the forward receiver **300** along at least a partial length of the barrel **250**. Further, in some embodiments, a forward grip **750** can be coupled to the forestock Picatinny rail **850**. In some embodiments, the forward grip **750** can be used to handle and transport the firearm system **10**, and to enable a user to grip and stabilize the firearm system **10** during use.

Referring also to FIG. **4**, illustrating an exploded assembly view of a firearm system **10** in accordance with some embodiments of the invention, the forestock Picatinny rail **850** can be configured to be easily removed from the firearm system **10** to enable access to various components of the firearm system **10**, to enable rapid disassembly of the firearm system **10**, and/or to enable attachment and removal of accessories. For example, in some embodiments, the forestock Picatinny rail **850** can be assembled using at least one attachment component such as a conventional screw or bolt, or other conventional fastening assembly.

Some embodiments of the invention can include an optics rail **950** that can be used to support or mount various accessories of the firearm system **10**. In some embodiments, the optics rail **950** can include various attachment points for coupled components, including, but not limited to attachments for lighting, range finding, scoping and viewing, and recording. For example, in some embodiments, the optics rail **950** can be used to mount various accessories such as weapon lights, illuminators, laser range finders, optical scopes, digital scopes, cameras, video recorders, etc. For example, as illustrated in at least FIGS. **1** and **3**, in some embodiments, at least one optics assembly **980** can be coupled to the firearm system **10** using the optics rail **950**. In some embodiments, one or more adapters can be used to couple the optics assembly **980** to the optics rail **950**. In some embodiments of the invention, the optics rail **950** can be mounted to the receiver complex **2000**. As illustrated in FIGS. **1** and **3**, in some embodiments, the optics rail **950** can be coupled to the receiver complex **2000** extending from the receiver annex **5000** to proximate the forward receiver **300**. Referring also to FIG. **4**, illustrating an exploded assembly view of the firearm system **10** in accordance with some embodiments of the invention, in some embodiments, the optics rail **950** can be assembled using a plurality of attachment components such as conventional screws or bolts. Further, in some embodiments, the optics rail **950** can be

configured to be easily removed from the firearm system **10** by an operator. For example, in some embodiments, the optics rail **950** can be removed from the firearm system **10** to enable access to various components of the firearm system **10**, to enable rapid disassembly of the firearm system **10**, and/or to enable attachment and removal of accessories. In some embodiments, the optics rail **950** can be used to support, mount, grasp, and/or handle the firearm system **10**. In some embodiments, the optics rail **950** can include various attachments or coupled components, including, but not limited to attachments for grasping or supporting the firearm system **10**.

In some embodiments of the invention, the firearm system **10** can include electronics and control circuits used for controlling the firearm system **10**. For example, FIG. **5** illustrates an internal side view of a buttstock **1100** of the firearm system **10** shown in FIGS. **1-3** showing a close-up of a driver board **1470** in accordance with some embodiments of the invention. In some embodiments, the driver board **1470** can be secured with the electronics chassis **1200** using any conventional mechanisms include screws, clips, rivets, and/or quick-release latches. In some embodiments, the driver board **1470** is mounted for rapid replacement and/or swap-out during use. For example, in some embodiments, the driver board **1470** can comprise a replaceable driver board **1470** that can be rapidly swapped with a new or used driver board **1470** in the field. In some embodiments, power can be provided to the driver board **1470** through a power connection to the power port **590**. In some other embodiments, power can be provided by an onboard battery positioned in the battery housing stock tube **1300**.

With the driver cover **1275** removed, the various functional components of the driver board **1470** supported in the electronics chassis **1200** can be viewed, shown surrounded by the various components of the buttstock **1100**, including the battery housing stock tube **1300**, the butt plate **1325**, and the butt pad **1335**. In some embodiments, the driver board **1470** can comprise inputs **1485** and outputs **1490** into various components of the driver board **1470**. In some embodiments, the driver board **1470** can include ultra-fast diodes **1473**, coupled to drive transistors **1475**, Darlington transistors **1480**, and driver electrodes **1495**. In some embodiments, driver board **1470** can control various functions of the firearm system **10** based at least in part on an operator's input (e.g., input through the trigger **600**). For example, in some embodiments, the driver board **1470** can control current from at least one power source (e.g., a battery positioned in the battery housing stock tube **1300**) to at least one striker coil **3050** in the striker coil assembly **3000**.

In some embodiments of the invention, the driver board **1470** can couple with at least one trigger control system to control operation and discharge of the firearm system **10**. With the electronic bay removable cover **1265** removed, various functional components of the trigger board **1410** can be viewed. For example, FIG. **6** illustrates a side view of a rear portion of the firearm system **10** of FIGS. **1-3** including an internal view of the buttstock **1100** from an opposite side than shown in FIG. **5**, and shows a close-up of a trigger board **1410** in accordance with some further embodiments of the invention. The trigger board **1410** is shown supported in the electronics chassis **1200** positioned on the left side of the firearm system **10**, and surrounded by the various components of the buttstock **1100**, including the battery housing stock tube **1300**, the butt plate **1325**, and the butt pad **1335**. In some embodiments, the trigger board **1410** can be coupled or mounted to a circuit board mounting chassis **1400** that can be supported in the electronic chassis **1200**. In some embodiments, power can be provided to the trigger board **1410** through a power connection to the power port **590**. In some other embodiments, power can be provided by an onboard battery positioned in the battery housing stock tube **1300**.

Some embodiments of the invention include a trigger board **1410** that can comprise control circuitry that can respond to or sense a mechanical actuation of the trigger **600**. In some embodiments of the invention, the trigger board **1410** can sense actuation of the trigger **600**, and can generate at least one signal or pulse to discharge at least a portion of the firearm system **10**. In some embodiments, the trigger board **1410** can be secured to the circuit board mounting chassis **1400** within the electronics chassis **1200** using any conventional mechanisms include screws, clips, rivets, and/or quick-release latches. In some embodiments, the trigger board **1410** can be mounted for rapid replacement and/or swap-out or repair during use. For example, in some embodiments, the trigger board **1410** can comprise a replaceable trigger board **1410** that can be rapidly swapped with a new or used trigger board **1410** in the field.

In some embodiments, the trigger board **1410** can comprise at least one logic chip (sequencer) **1430**, and at least one solid state relay **1455**. The trigger capacitor **1435** and power supply **1437** are shown mounted on the trigger board front end **1415**, with ribbon cable to trigger **1450**, and coil harness **1440**. In some embodiments, the trigger board **1410** can control operation of the firearm system **10** based on the position of and/or an actuation of the trigger **600**. In some embodiments of the invention, the use of at least one optoisolator (not shown) can enable the firearm system **10** to operate safely by optically isolating portions of the trigger board **1410** (e.g., the trigger circuit) from the rest of the circuitry. In this instance, spurious or random electrical pulses that may trigger an unwanted or unplanned actuation of the striker coil assembly **3000** can be avoided.

Other electrical interconnections are shown including ribbon cable to drivers **1445**. In some embodiments, at least one operational aspect of the firearm system **10** can be optically communicated to an operator. For example, in some embodiments, annunciators **1425** can be illuminated based on one or more functions of the firearm system **10**, and an annunciator window **1420** can enable a user to view the annunciators **1425**. In some embodiments, the firearm system **10** can also include a ready light **1465** viewable by an operator, that can be configured to light based on the operational readiness of the firearm system **10**. In some embodiments, the firearm system **10** can comprise a reset button **1460** (shown extending through the circuit board mounting chassis **1400**). In some embodiments, at least one controller and/or function of the firearm system **10** can be reset using the reset button **1460**.

In some embodiments of the invention, the firearm system **10** can be discharged by an operator using a trigger mechanism. FIG. **7** illustrates a trigger region view of a firearm system **10** in accordance with some embodiments of the invention, and FIG. **8** illustrates a trigger region view of a firearm system **10** illustrating a trigger pull in accordance with some embodiments of the invention. In some embodiments, the firearm system **10** can comprise a trigger assembly **540** including a trigger **600** that can be actuated by an operator to discharge the firearm system **10**. In some embodiments, the trigger assembly **540** can comprise a trigger housing **545** including a trigger guard **560** that can at least partially surround the trigger body **620** of the trigger **600**. The trigger guard **560** can prevent unwanted or unintended actuation of the trigger **600**.

In some embodiments, the trigger **600** can be actuated by an operator to discharge the firearm system **10** using a trigger contact assembly **630**. In some embodiments, when an operator pulls the trigger **600** (e.g., by moving the trigger body **620** at least a partial distance towards the pistol grip **500**), the trigger body **620** can pivot on the trigger pivot bolt **655**, and move the various trigger components of the trigger contact assembly **630** to a closed position (illustrated in FIG. **8**). In this instance, the first trigger contact **632** is closed, and a second trigger contact **634** is opened with movement at least partially governed by a force limiting duplex leaf **648**. In some embodiments, this actuation is sensed by the trigger board **1410** through electrical connections from the trigger contact assembly **630** through the harness conduit **530**, that also provides a passageway for the harness **575** coupled through to the power port **590**. In some embodiments, when the trigger **600** is pulled, the trigger rebound spring **645** can compress, and can store potential energy for later release of the trigger **600** when the firearm system **10** has discharged and/or when the operator releases the trigger body **620**.

Referring to FIG. **7**, when the operator ceases to apply force to the trigger body **620**, the trigger rebound spring **645** can expand (shown represented in FIG. **7**), and can apply a force to the trigger body **620** to move the trigger body **620** back towards the front of the firearm system **10**. As the trigger body **620** moves (e.g., away from the pistol grip **500**), the trigger body **620** can pivot on the trigger pivot bolt **655**, and move the trigger contact assembly **630** to an open position (shown in FIG. **7**). In this instance, the first trigger contact **632** is opened and a second trigger contact **634** is closed with movement at least partially governed by a force limiting duplex leaf **648** and the trigger rebound spring **645**.

FIG. **9**A illustrates an exploded assembly view of a receiver **4000** and action in accordance with some embodiments of the invention. In some embodiments of the invention, the receiver complex **2000** of the firearm system **10** can include a receiver **4000** comprising a receiver body **4025** that can house miscellaneous components for facilitating loading of ammunition into the firearm system **10** and facilitating discharge of the ammunition. For example, the receiver **4000** can house a feed control carriage **5200** that can be positioned in and out of a loading position within the inner region **4005** of the receiver **4000** to facilitate loading and unloading of ammunition and/or ammunition assemblies. Some embodiments of the invention include at least one bushing **5800** and at least one headspace shim **3500** that can be assembled into the inner region **4005** of the receiver **4000** proximate the main support **4050** of the receiver **4000**. In some embodiments, the receiver **4000** can also house an action cam **5400**. In some embodiments, the action cam **5400** can be assembled into the inner region **4005** of the receiver **4000** proximate or coupled to the bushing **5800**.

Some embodiments of the invention can include a movable recoil shield and camshaft assembly. For example, in some embodiments, a recoil shield **3300** can be assembled into the inner region **4005** of the receiver **4000** at least partially surrounding the action cam **5400**, the at least one bushing **5800**, and the at least one headspace shim **3500**. In some embodiments, the recoil shield **3300** can be free to slide forward and backward within a range limited by the action of the action cam **5400**. In some embodiments, the action cam **5400** can be mounted within the inner region **4005** behind the recoil shield **3300**. In some embodiments, the axis of the camshaft can be positioned within the plane of the bores **260** of the barrel **250** and can be substantially perpendicular to the axis of the bores **260**.

In some embodiments, the recoil shield **3300** can contain a series of firing pin holes corresponding in number and location to the primers in the charge block **9000**. In some embodiments, the recoil shield **3300** can be positioned in the frame just far enough from the breech end **265** to allow the charge block **9000** to pass through the openings in the frame between the breech end **265** and the recoil shield **3300**. In some embodiments of the invention, a frame can be attached to the breech end **265** of the barrel **250** and to which all the other parts can be coupled. In some embodiments, the frame can include an opening at the breech end **265** of the barrel **250** to allow the passage of the charge block **9000**.

In some embodiments, a feed control mechanism can be mounted to the frame and can control the motion of the charge block **9000** into and out of the frame and alignment with the bores **260**. In some embodiments, a fire control mechanism can control the operation of the action cam **5400** and the plurality of firing pins **3200**. In some embodiments of the invention, in operation, the feed control mechanism can move a charge block **9000** into position between the barrel breech (breech end **265**) and the recoil shield **3300**. In some embodiments, the forward part of the charge block **9000** (containing the charge holes with the projectiles **9400** and propellant) can face the breech end **265**, while the rearward part of the charge block **9000** (containing the primers) can face the recoil shield **3300**. In some embodiments, with the charge block **9000** in place, the charge holes can precisely aligned with the bores **260** of the barrel **250**. The camshaft **5425** can be rotated, which can force the recoil shield **3300** forward, and can trap the charge block **9000** between the breech of the barrel **250** and the recoil shield **3300**. In some embodiments, the metal-to-metal contact between the charge block **9000** and the breech can serve to seal the gap between the two parts, which in some embodiments can prevent the escape of hot propellant gases. This feature can serve several purposes in some embodiments. For example, in some embodiments, this feature can help to reduce fouling of the action by the hot gases. In some further embodiments, this feature can reduce the transfer of heat to the working parts of the action. Further, in some embodiments, this feature can reduce the erosion of action parts by the cutting effect of hot gases flowing under high pressure. Finally, in some embodiments, this feature can help to reduce the report produced by the firearm system **10**.

In some embodiments, the camshaft **5425** can rotate to lock parts together and then can stop in that position. In this instance, the action is "In Battery" and ready to fire. In some embodiments, firing can be accomplished by the operation of the plurality of firing pins **3200** by the fire control mechanism. In some embodiments, the plurality of firing pins **3200** can be actuated sequentially. In some further embodiments, the plurality of firing pins **3200** can be actuated substantially simultaneously. In some embodiments, the plurality of firing pins **3200** can be actuated until all charges in the charge block **9000** are exhausted. In some embodiments of the invention, after firing is completed, the camshaft **5425** can be rotated in the opposite direction, unlocking the action, withdrawing the recoil shield **3300** and releasing the charge block **9000**. In some embodiments, the feed control mechanism can then expels the empty charge block **9000** and replaces it with a fresh one, completing the cycle.

In some embodiments, the Barlows equation for pressure within vessels and pipes can be used to define one or more

structural parameters and/or dimensions of the charge block **9000**. For example,

$$A=(2ST)/Do, \quad \text{(equation 1)}$$

And

$$B=(2ST/DoSf) \quad \text{(equation 2)}$$

Where

S is the ultimate tensile strength (lb. in^2), T is wall thickness (inches), Do is outside diameter (inches), A is burst pressure (kpsi), B is working pressure (kpsi), Sf is safety factor. Further, bb—Tubular bobbin center section 0.015 or 0.045 wall thickness. Secondary structural component of pressure vessel: sf 1.5. Contributes to "Cwp". Anterior flange sf 1.5 steel bobbin component. Posterior Flange sf-NA is more robust than the anterior flange. In some embodiments of the invention, any bobbin can be supported in the battery by the breech face **268** and/or the composite charge block body. Further, during discharge events, bobbins (within charge block **9000**) will be under axial compression forces from the action cam, as well as circumferential tensile forces within the pressure vessels.

In some embodiments, the barrel **250** of the firearm system **10** can be cooled. For example, some embodiments of the invention can comprise a personal weapon (e.g., a battle rifle) that includes enhancements such as a method of barrel cooling. For example, in some embodiments, the encasement of the barrel **250** can be encased in a thermally conductive material such as aluminum, with a maximized surface area to transfer excess heat to the atmosphere. For example, in some embodiments, the casing of the barrel **250** can include one or more fins. For example, in some embodiments, the casing of the barrel can include a plurality of fins (similar to the cylinder of an air-cooled piston engine). In some embodiments, the light alloy can conduct heat resulting in an effective air-cooled barrel with no moving parts. In some embodiments, the barrel **250** can be no heavier than a solid steel barrel from a conventional single-bore rifle. In some embodiments, the barrel **250** can be fired continuously with no loss of function for as long as necessary.

In some embodiments of the invention, the firearm system **10** can include various mechanisms for igniting and discharging ammunition. Some embodiments of the invention include various electromechanical assemblies that can be controlled by the firearm system **10** in response to an operator's selection of a firing preference. In some embodiments, the electromechanical assemblies can comprise electromechanically operated strikers that can be positioned within the receiver complex **2000** adjacent or proximate the receiver **4000**. For example, FIG. **9**B illustrates a striker coil assembly **3000** including firing pins in accordance with some embodiments of the invention. In some embodiments of the invention, the striker coil assembly **3000** can comprise a striker coil array **3025** comprising at least one striker coil **3050** comprising a striker coil bobbin **3100**. In some embodiments, the striker coil assembly **3000** can be positioned adjacent the outside of the receiver **4000** proximate the main support **4050** (i.e. the opposite side to the at least one bushing **5800**, the at least one headspace shim **3500**, and the action cam **5400**). In some embodiments, the coil plate **3150** can be positioned proximate or adjacent with the outside of the receiver **4000** proximate the main support **4050**.

In some embodiments, the striker coil assembly **3000** can comprise at least one striker **3160**. In some embodiments, the at least one striker **3160** can be positioned within the striker coil assembly **3000**, extending out of the at least one least one striker coil **3050** proximate or adjacent the coil plate **3150**. Further, in some embodiments, the striker coil assembly **3000** can include at least one firing pin flange pocket **3170**, and the at least one striker **3160** can be positioned within the striker coil assembly **3000**, extending out of the at least one least one striker coil **3050** proximate or adjacent the at least one firing pin flange pocket **3170**.

In some embodiments of the invention, the firearm system **10** can include firing pins for firing and discharging ammunition from the firearm system **10**. For example. as shown in FIG. **9**B, some embodiments of the firearm system **10** can be assembled with a firing pin assembly **3190** including a firing pin array **3195** comprising a plurality of firing pins **3200**. In some embodiments of the invention, the firing pin array **3195** can be positioned in the inner region **4005** of the receiver **4000**. FIG. **10**A illustrates a main receiver frame **4000** and action showing the previously described feed control carriage **5200**, recoil shield **3300**, action cam **5400**, bushing **5800**, and headspace shim **3500** assembled into the inner region **4005** of the receiver **4000**. The plurality of firing pins **3200** are also shown nestled between firing pin clearance grooves **5750** of the action cam **5400**.

Referring again to FIG. **9**B, in some embodiments of the invention, the firearm system **10** can comprise a plurality of firing pins **3200** including at least a first firing pin **3200***a*, a second firing pin **3200***b*, a third firing pin **3200***c*, a fourth firing pin **3200***d*, and a fifth firing pin **3200***e*. In some embodiments, each of the plurality of firing pins **3200***a*, **3200***b*, **3200***c*, **3200***d*, and **3200***e* can comprise a tubular body **3230**, and a solid shank **3240** extending from one end of the tubular body **3230**, and a flange **3210** coupled to the other end of the tubular body **3230**. In some embodiments, the solid shank **3240** can comprise an alignment ball **3250** with a stepped tip **3260** positioned at the end opposite the flange **3210**. Further, in some embodiments, at least one return spring **3225** can be positioned over the spring shank **3220**, directly adjacent to the flange **3210**.

Referring again to FIG. **10**A, in some embodiments, when the plurality of firing pins **3200** are positioned between the firing pin clearance grooves **5750** of the action cam **5400**, and the at least one bushing **5800** is assembled into the inner region **4005** of the receiver proximate the action cam, the plurality of firing pins **3200** can extend through a plurality of firing pin holes **3320** of the recoil shield **3300**. In doing so, in some embodiments, at least one stepped tip **3260** of the plurality of firing pins **3200** can extend through the recoil shield **3300**. This is also shown in FIGS. **11**A and **11**B, and described below.

The assembly of components with the receiver **4000** described above and depicted in FIG. **9**A and **9**B can be further visualized in FIGS. **10**B-**10**D showing the receiver **4000** depicted in several stages of assembly into the inner region **4005** of the receiver **4000**. For example, FIG. **10**B illustrates a main receiver **4000** frame with recoil shield **3300** removed in accordance with some embodiments of the invention, FIG. **10**C illustrates a main receiver **4000** frame with recoil shield **3300** and action cam **5400** removed in accordance with some embodiments of the invention, and FIG. **10**D illustrates a main receiver **4000** frame with recoil shield **3300**, action cam **5400**, and bushing **5800** removed in accordance with some embodiments of the invention. Shown in this view are the firing pin aperture **4090** and the bushing locator pins **4100**.

Further details of the action cam **5400** are illustrated in the various views shown in FIGS. **10**E-**10**I. For example, FIG. **10**E illustrates a perspective view of the action cam **5400** in accordance with some embodiments of the invention. FIG.

10F illustrates a bottom view of the action cam **5400** in accordance with some embodiments of the invention, and FIG. **10**G illustrates a front view of the action cam **5400** in accordance with some embodiments of the invention. Further, FIG. **10**H illustrates a bushing side view of the action cam **5400** in accordance with some embodiments of the invention, and FIG. **10**I illustrates an end view of an action cam **5400** in accordance with some embodiments of the invention. In some embodiments, the action cam **5400** can comprise a camshaft **5425**, and a cam lever **5500** coupled to the camshaft **5425**. In some embodiments, the camshaft **5425** can comprise a plurality of load bearing disks **5700** and a plurality of assembly grooves **5710**, where each of the grooves is positioned between two of the disks of the plurality of load bearing disks **5700**.

In some embodiments, the action cam **5400** includes firing pin clearance groove **5750**, and knob screw clearance cut **5760**. Referring to FIG. **10**F, the camshaft **5425** can comprise a lobe tip **5720** extending the longitudinal length of the camshaft **5425**. Referring to FIG. **10**I, in some embodiments, the camshaft **5425** can comprise a cam lobe profile **5770** that includes a locking lobe **5780**, and a cam base circle and load bearing surface **5785**. In some embodiments, the cam base circle and load bearing surface **5785** can interface with bushing **5800** when assembled into the main receiver **4000**. In some embodiments, the action cam **5400** can include at least one structure related to timing of one or more actions of the firearm system **10**. For example, in some embodiments, the firearm system **10** can include a first timing pin **5730** extending from the camshaft **5425**. Some embodiments also include a second timing pin **5740** extending from the camshaft **5425**. In some embodiments action cam **5400** can be rotated ⅛ turn (45°) by the motion of cam lever **5500**. With cam lever **5500** in the forward position, the lobe tip **5720** is positioned 45° out of the plane of the bores **260**, the recoil shield **3300** is in its rearmost position, and the first timing pin **5730** can engage the feed control carriage bridge **5205** timing slot **5217***a*. Pin **5730** holds the feed carriage **5200** in a position such that feed control pins **5219** are not in alignment with feed grooves **9200** of charge block **9000**. The base of charge block **9000** rests on feed control pins **5219** with chambers **9425***a*, **9425***b*, **9245***c*, **9245***d*, **9245***e* correctly aligned with bores **260***a*, **260***b*, **260***c*, **260***d*, **260***e*. In some embodiments, movement of cam lever **5500** away from the forward position rotates action cam **5400** lobe tip **5720** toward the plane of bores **260***a*, **260***b*, **260***c*, **260***d*, **260***e*, thereby forcing the recoil shield **3300** forward to trap charge block **9000** between breech of barrel **250**, and the face of recoil shield **3300**. In some embodiments, castellations **3317** couple with complementary recessed areas **9300** on charge block **9000**. In some embodiments, detent pins (not shown) delay forward movement of the feed control carriage **5200** until the second timing pin **5740** engages feed control carriage bridge **5205** timing slot **5217***b*. In some embodiments, continued movement of cam lever **5500** to the rearward position aligns action cam **5400** lobe tip **5720** with the plane of bores **260**, locking the action into battery and forcing feed control carriage **5200** forward to position feed control pins **5219** into alignment with feed grooves **9200** of charge block **9000**. In some embodiments, movement of the cam lever **5500** away from rearward position rotates action cam **5400** lobe tip **5720** away from plane of bores **260**, unlocking action and releasing charge block **9000**. In some embodiments, rearward motion of the feed control carriage **5200** is delayed by feed control carriage return springs (not shown) until first timing pin **5730** engages feed control bridge **5205** timing slot **5217***a*. In some embodiments, the magazine spring **1900** forces charge block **9000** angles feed grooves **9200** to engage feed control pins **5219**. In some embodiments, continued movement of cam lever **5500** rotates action cam **5400** first timing pin **5730** to move feed control carriage **5200** rearward as magazine spring **1900** forces charge block **9000** angled feed grooves **9200** past feed control pins **5219**. In some embodiments, the charge block **9000** exits ejection port **2500** as the cam lever **5500** reaches a forward position and feed control carriage **5200** reaches rearward position with feed control pins **5219** out of alignment with feed grooves **9200** of subsequent charge block **9000**. In some embodiments, the base of subsequent charge block **9000** encounters feed control pins **5219** and rests with chambers **9425***a*, **9425***b*, **9425***c*, **9425***d*, **9425***e* correctly aligned with bores **260***a*, **260***b*, **260***c*, **260***d*, **260***e*, completing the action cycle.

FIG. **10**J illustrates a perspective view of a cam bushing **5800** in accordance with some embodiments of the invention. The cam bushing **5800** provides the main structural thrust support for the cam shaft **5425** of the action cam **5400**, and in some embodiments, includes various relief and clearance holes. For example, in some embodiments of the invention, the cam bushing **5800** includes a cam lever clearance cut **5810**, timing pin clearance holes **5820**, and firing pin clearance holes **5830**.

When assembled with the receiver **4000** coupled with the first side wall **4075** and the second side wall **4080**, the feed control carriage **5200** can facilitate movement of charge blocks **9000** within the feedport **2500** of the receiver complex **2000**. FIG. **10**K illustrates a perspective view of a feed control carriage **5200** in accordance with some embodiments of the invention. In some embodiments, the feed control carriage **5200** can comprise a feed control carriage bridge **5205** extending between side walls **5207**, **5209**. The feed control carriage bridge **5205** can comprise timing slots **5217***a*, **5217***b* positioned to provide clearance for the first and second timing pins **5730**, **5740** of the action cam **5400**. In some embodiments, the side walls **5207**, **5209** can include a plurality of guide rails **5211** configured to couple with the side walls **4075**, **4080** of the receiver **4000**. For example, in some embodiments, the feed control carriage **5200** can comprise upper and lower guide rails **5213***a*, **5213***b* on either or both side walls **5207**, **5209**. In some further embodiments, the feed control carriage bridge **5205** can comprise a knob screw slot **5215** to facilitate coupling of the load knob **400**. Further, in some embodiments, either or both side walls **5207**, **5209** can comprise feed control pins **5219** positioned to couple with feed grooves **9200** of the charge block **9000**.

In some embodiments, each charge within a charge block **9000** can be fired by its own firing pin. In some embodiments, the number of firing pins can equal the number of charges of the charge block **9000**. Referring to FIG. **11**A, illustrating a rear perspective view of a recoil shield **3300**, in some embodiments, the firearm system **10** can include a plurality of firing pins **3200** aligned with and inserted through a plurality of firing pin holes **3320** in the recoil shield **3300**. In some embodiments, the plurality of firing pins **3200** can be used to fire a plurality of projectiles from the firearm system **10**. For example, for a charge block **9000** comprising five chambers, a separate firing pin can be assigned to each chamber, and therefore the firearm system **10** can comprise five firing pins comprising the first firing pin **3200***a*, the second firing pin **3200***b*, the third firing pin **3200***c*, the fourth firing pin **3200***d*, and the fifth firing pin **3200***e*.

In some embodiments, the plurality of firing pins **3200***a*, **3200***b*, **3200***c*, **3200***d*, **3200***e* can be aligned with and

assembled with the plurality of firing pin holes **3320**. For example, in some embodiments of the invention, the first firing pin **3200***a* can be assembled into the first firing pin hole **3320***a*, and the second firing pin **3200***b* can be assembled into the second firing pin hole **3320***b*. Further, the third firing pin **3200***c* can be assembled into the third firing pin hole **3320***c*, the fourth firing pin **3200***d* can be assembled into the fourth firing pin hole **3320***d*, and a fifth firing pin **3200***e* can be assembled into the fifth firing pin hole **3320***e* as shown. As shown, the plurality of firing pins **3200** can be positioned in the recoil shield **3300** extending away from the shield body **3310** and between and generally parallel with the wings **3315**. In some embodiments, with the wings **3315** being positioned perpendicular to the shield body **3310**, the plurality of firing pins **3200** can be positioned extending from the shield body **3310** towards one or more sides of the shield body **3310**. For example, FIG. **11**B illustrates a front perspective view of recoil shield **3300** showing the plurality of firing pins **3200** extending through the plurality of firing pin holes **3320** in accordance with some embodiments of the invention. In some embodiments, the plurality of firing pins **3200** can pass through the shield body **3310** with the stepped tips **3260** of the plurality of firing pins **3200** exposed and extending away for the shield body **3310**. In some embodiments of the invention, the plurality of firing pins **3200** can slant towards either of the first side **3312** of the shield body **3310** or the second side **3313** of the shield body **3310**. In the example embodiment depicted in FIGS. **11**A and **11**B, the first, third, and fifth plurality of firing pins **3200***a*, **3200***c*, **3200***e* can slant towards the first side **3312** of the shield body **3310**, and the second, and fourth plurality of firing pins **3200***b*, **3200***d* can slant towards the second side **3313** of the shield body **3310**. Also shown in FIG. **11**B are the castellations **3317** that couple with complementary recessed areas **9300** on the charge block **9000**.

FIG. **12** illustrates a perspective view of the receiver complex **2000** showing the recoil face region of the firearm system **10** in accordance with some embodiments of the invention. This view includes a close-up of the center region of the receiver complex **2000** with the opening in the receiver **4000** for the charge block **9000** (feedport **2500**), and also illustrates the feed rod **450**. This view also shows the recoil shield **3300** and the plurality of firing pin holes **3320** from the front viewing towards the rear of the weapon. Further as illustrated, some embodiments of the invention include an extension to the rear of the receiver **4000** that houses the striker coil assembly **3000**, and serves as a mounting point for the buttstock **1100**. For example, FIG. **13**A illustrates a side view of a receiver annex **5000** region of the firearm system **10** in accordance with some embodiments of the invention, and FIG. **13**B illustrates an internal view of a receiver annex **5000** region of the firearm system **10** in accordance with some embodiments of the invention. In some embodiments, the receiver annex **5000** also houses a harness conduit **530** for wiring can lead through the stock to the various control boards (e.g., trigger board **1410** and driver board **1470**) as well as the battery tube (with the battery tube interior **5150** shown in FIG. **8**). Also shown is the cam lever feed rod **450**, with rod spring **5525** coupled to mounting point **5100**.

FIG. **14** shows the breech region of the firearm system **10** in accordance with some embodiments of the invention. This view shows the ejection port (feedport **2500**) showing the load knob **400** and feed control carriage **5200** in the loading position (pulled to the rear). Also shown is the breech **5175**, including gas rings **5230**, vents **5225**, and forcing cones **5220**. FIG. **15** shows the feedport region of the receiver complex **2000** of the firearm system **10** in accordance with some embodiments of the invention. Shown adjacent to the load knob **400** is the latching tooth cavity **5240**. Further, the ejection port (feedport **2500**) is shown with the load knob **400** in the forward position, and the action closed and locked without a charge block **9000** in place, and shows follower finger **5395** and loading ratchets **5390** in their stowed position.

In some embodiments, the firearm system **10** can include removable housing for storing and feeding ammunition into the firearm system **10**. For example, in some embodiments, the firearm system **10** can include a removable and/or replaceable magazine that can be used to store ammunition, and help feed ammunition into the firearm system **10**. In some embodiments, the magazine can feed ammunition including dischargeable projectiles into the firearm system **10**. In some embodiments, the magazine can be pre-loaded with ammunition when uncoupled from the firearm system **10**.

In some embodiments of the invention, the firearm system **10** can load and discharge ammunition that comprises a combination of chamber and ammunition. FIG. **16** illustrates a view of the ammunition magazine **1750** and feed control portion of the firearm showing internal action in accordance with some embodiments of the invention. The cam lever feed rod **450** is shown extending from the firearm system **10** coupled to the cam lever **5500**. In some embodiments, an operator can actuate the cam lever **5500** using the thumb pad **475** mounted to the feed rod **450**. In some embodiments, the ammunition magazine **1750** shown extending from the receiver **4000** can provide ammunition to the firearm system **10**. In some embodiments, feeding of ammunition from the ammunition magazine **1750** can be controlled by an operator using the feed rod **450** and/or the load knob **400**. Feed rod **450** and load knob **400** are provided to enable direct manual control of the mechanical action of the firearm system **10**. The thumbpad **475** can be accessible while a user's hand remains on the pistol grip **500**, and a user can press the thumbpad **475** to push cam lever **5500** towards a forward position. Referencing FIG. **16**, in some embodiments, the spring nut **460** can anchor one end of expansion spring **5225** to feed rod mounting bracket **415**. In some embodiments, the anchor screw **465** can attach to the other end of expansion spring **5225** to feed rod **450**. In some embodiments, flats **445** on both sides of the feed rod **450** can be engaged with slot **440** of mounting bracket **415** when the feed rod **450** is in a fully forward position (to hold action in the open and unlocked condition). Further, in some embodiments, spring nut **460** can slide in the spring nut slot **470**. In some embodiments, compression spring **480** can hold flats **445** out of slot **440** unless desired. In some embodiments, the thumbpad **475** can be pressed fully forward (at any time), and then be released to cycle action and exchange charge blocks **9000**. In some embodiments, the rod **450** couples with cam lever **5500** at pivot point **430**. In some embodiments, each time thumbpad **475** is pressed and released, the charge block in battery is ejected by the force stored in the magazine spring and transmitted to the charge block in battery by adjacent charge blocks **9000** or the magazine follower **1810**. In some embodiments, when the thumbpad is pressed to eject the final charge block **9000**, magazine follower **1810** moves past the follower finger **5395**, engaging the action latch pin and catching the cam lever **5500** in the forward position. In some embodiments, the load knob **400** is coupled to the feed control carriage **5200** by the knob screw and the knob screw slot **5215**. In some embodiments, slot **5215** allows normal cycling of the feed control carriage

5200 when knob 400 is in the forward position. In some embodiments, pulling the load knob 400 to the rear pulls feed control carriage 5200 to its rear-most position. In some embodiments, the rear feed control pins 5219 stow into pockets in right side plate 425 while front feed control pins 5219 align with magazine guide rails 1780 and 1770. In some embodiments, load ratchets 5390 deploy and permit one-way passage of charge blocks 9000 through feed control carriage 5200 into magazine 1750. In some embodiments, motion of the magazine follower 1810 back past follower finger 5395 retracts action latch pin, releasing cam lever 5500. In some embodiments, releasing load knob 400 returns feel control carriage 5200 to a forward position, retracts loading ratchets 5390, and allows expansion spring 5525 to pull cam lever 5000 to rearmost position, rotating action cam and locking action into battery. In some embodiments, a partially empty magazine can be refilled by pressing thumbpad 475 forward until flats 445 engage with slot 440, then inward to lock action open. In some embodiments, a user can pull and latch load knob 400 and insert charge blocks 9000 into magazine 1750. The user can then move thumbpad 475 outward to unlock action, and then release load knob 400 to return action to battery.

FIGS. 17, and 18A-18C illustrate various views of an ammunition magazine 1750 of the firearm system 10. Referring initially to FIG. 17, illustrating a side view of a magazine 1750, in some embodiments, the ammunition magazine 1750 can comprise a main housing 1760, and at least one quick release latch 1790 coupled to the main housing 1760, and a base ring 1840 coupled to the main housing 1760 at one end of ammunition magazine 1750. In some embodiments, the ammunition magazine 1750 can store and feed ammunition that comprises a combination ammunition chamber, ammunition and magazine assembly (hereinafter referred to as a "charge block" and shown as charge block 9000). In some embodiments of the invention, the firearm system 10 can include a plurality of blocks 9000 coupled to or otherwise inserted into and housed within the ammunition magazine 1750 for the purpose of feeding at least one charge block 9000 into the feedport 2500 of the firearm system 10. More specifically, some embodiments of the invention can include one or more charge blocks 9000 coupled to or inserted into the ammunition magazine 1750 for enabling the firearm system 10 to discharge at least one projectile (e.g., a bullet) from the charge block 9000 and out of the firearm system 10 towards a target. As shown in FIG. 17, in some embodiments, a plurality of charge blocks 9000 can be housed in the main housing 1760 of the ammunition magazine 1750. In the example embodiment shown in FIG. 17, when the ammunition magazine 1750 is fully loaded with charge blocks 9000 (e.g., the housing includes eight charge block 9000), a magazine spring 1900 can be positioned in the main housing 1760 in a spring position 1905. In this position, the magazine spring 1900 can be in a compressed state, and can apply a force to one or more charge blocks 9000 within the ammunition magazine 1750.

FIG. 18A illustrates a perspective view of the ammunition magazine 1750, FIG. 18B illustrates a side view of the ammunition magazine 1750, and FIG. 18C illustrates a perspective view of the ammunition magazine 1750 in accordance with some embodiments of the invention. In some embodiments, the ammunition magazine 1750 can comprise a receiver coupling assembly 1770 coupled to the main housing 1760. In some embodiments, the ammunition magazine 1750 can include a base ring 1840 including a screw mount boss 1860 extending from the base ring 1840, and a cam lever clearance groove 1850 formed in the base ring 1840. Further, in some embodiments of the invention, the ammunition magazine 1750 can include at least one guide rail extension 1780 extending from the main housing 1760. In some embodiments, the receiver coupling assembly 1770 can include a follower 1810 with a firing pin clearance groove 1820, and at least one stand-off pad 1870.

In some embodiments, the above described ammunition magazine 1750 can be used to hold, store, and/or feed ammunition into the firearm system 10 for discharge of ammunition. In some embodiments, the ammunition magazine 1750 can feed ammunition from at least one charge block 9000 including one or more projectiles into the firearm system 10. In some embodiments of the invention, the firearm system 10 can discharge at least one projectile from the ammunition comprising a charge block 9000. Further, as shown in the view of FIG. 18B, in some embodiments, at least one side of the ammunition magazine 1750 can comprise at least one overpressure vent 1800 that can facilitate escape of gases produced as a result of ammunition discharge from one or more charge blocks.

FIG. 19 illustrates a perspective view of a charge block 9000 in accordance with some embodiments of the invention. In some embodiments, the charge block 9000 can comprise a flat block, square or rectangular in shape, with a series of charge holes along one edge corresponding in number and spacing to bores 260 of the firearm system 10. In some embodiments of the invention, the charge blocks 9000 can combine the functions of breech block, chamber, cartridge case and magazine. In some embodiments of the invention, each charge block 9000 can act as a breech block as it comes into battery (feedport 2500) in line with the bores 260 of a firearm system 10. In some embodiments, combining the chamber with the cartridge eliminates the need for an integral chamber in the barrel 250, as well as the need for a powerful action to feed cartridges into that chamber. In some embodiments, each charge block 9000 is also a magazine, and in some embodiments, can hold as many shots as the firearm system 10 has bores 260.

In some embodiments of the invention, each charge block 9000 can contain a plurality of side-by-side "charges." As used herein, side-by-side shall mean any substantially aligned configuration whether disposed horizontally, vertically or otherwise. In some embodiments, each charge can comprise at least one projectile, propellant, and primer. In some embodiments, each charge can comprise at least one projectile, propellant, and primer arranged as in a conventional cartridge. In some embodiments, each charge hole can be substantially the same diameter as the bores 260, and can be open at the top, closed at the bottom, and deep enough to contain a projectile with propellant below. In some embodiments of the invention, a series of primer pockets are arranged along the opposite edge of the charge block corresponding in number and spacing to the charge holes. In some embodiments, each primer pocket is connected to the closed end of the corresponding charge hole by a flash hole. In some embodiments, each primer pocket is fitted with a standard primer of the boxer type.

In some embodiments of the invention, the charge block 9000 can be positioned behind the breech of the barrel 250 of the firearm system 10. For example, in some embodiments of the invention, each charge can align with one of the five matching bores (e.g., such as bores 260 of a barrel 250 illustrated in FIG. 22). In some embodiments, the charge block 9000 can comprise a generally rectangular block body 9025 comprising top and bottom surfaces 9100 and sides 9125, and ends including a recoil face 9135, and a breech face 9145. Because of the flat, substantially square shape,

charge blocks can be stacked together to achieve a larger capacity magazine in some embodiments.

In some embodiments of the invention, the charge block **9000** can comprise a plurality of chambers **9425**. In the example embodiments of FIG. **19**, the charge block **9000** can comprise five chambers comprising a first chamber **9425***a* positioned adjacent to a second chamber **9425***b*, where the second chamber **9425***b* is positioned adjacent to a third chamber **9425***c*, the third chamber **9425***c* is positioned adjacent to a fourth chamber **9425***d*, and the fourth chamber **9425***d* is positioned adjacent to a fifth chamber **9425***e*. In some other embodiments, the charge block **9000** can comprise more or fewer chambers than shown. For example, in some embodiments, the charge block **9000** can comprise four or fewer chambers, and in some other embodiments, the charge block **9000** can comprise six or more chambers. In some embodiments, the charge block **9000** can be generally smaller than the size of a deck of playing cards. For example, in some embodiments, the charge block **9000** can measure between about 2.25 inches to about 2.5 inches by about 3.5 inches. In some other embodiments, the charge block **9000** can be less than about 2.25 inches by about 3.5 inches. In other embodiments, the charge block **9000** can be greater than about 2.25 inches by about 3.5 inches.

In some embodiments of the invention, the charge blocks **9000** can be arranged to substantially match the configuration of the bores **260** of the barrel **250**. For example, in some embodiments of the invention, where the bores **260** of the barrel **250** are positioned horizontally (i.e., the bores **260** of the barrel **250** are positioned in a side-by-side arrangement), the charge blocks **9000** can be arranged horizontally and stacked horizontally. In other embodiments where the bores **260** are positioned vertically (i.e., the bores **260** of the barrel **250** are positioned successively on top of each other), the charge blocks **9000** can be arranged vertically, and multiple charge blocks **9000** can be stacked vertically. In some embodiments, by dropping charge blocks **9000** into position for firing successively, a fresh charge block **9000** can replace an exhausted or partially exhausted charge block **9000**. Other embodiments can be used in other applications, such as a light machine gun (squad weapon), or a heavy machine gun (vehicle mounted), where various feeding arrangements (such as breech configurations that require feeding from the side or lifting the charge blocks from below) can be used.

In some embodiments, each charge within a charge block **9000** can be fired by its own firing pin. In some embodiments, once some or all charges are discharged, the charge block **9000** can be replaced with another charge block **9000** that is at least partially charged (e.g., includes at least one charge comprising a dischargeable projectile). In some embodiments, since each charge block **9000** is replaced after five shots or discharges, chamber overheating is not an issue. In some embodiments, because each charge block **9000** is not reused, there is no requirement to withstand repeated heavy pressures. In some embodiments, an ordinary chamber must be robust enough to safely fire every cartridge used over the entire life of the barrel **250**, perhaps many thousands of rounds, under any and all conditions. In some embodiments, the charge blocks **9000** are used only once, and so can be thinner. In some embodiments, the charge blocks **9000** are disposable. In some embodiments, the disposability of the charge blocks **9000** can remove the issue of chamber overheating, although in some embodiments, the problem of barrel heat remains. In some embodiments, barrel heat is less of a concern than chamber heat as it has little effect on function, but continuous firing could eventually result in reduced accuracy, bore erosion, ignition of flammable materials, etc.

In some embodiments, the use of charge blocks **9000** in a firearm system **10** can reduce the energy needed to operate the action of the firearm system **10**. In some embodiments, the charge blocks **9000** can slide into position using the energy stored in the magazine spring **1900**. In some embodiments, the charge block **9000** can be replaced once every five shots or less, with a total movement of only about 0.5 inch. In some embodiments, the motion is about 60 to 80 times less than what is needed for the same five shots in a conventional weapon and the time required can be substantially equally less.

In some embodiments, the charge block **9000** can comprise a width of about 50.8 mm, and a length of about 35 mm. In some embodiments, the charge block **9000** can comprise a thickness or height of about 12.7 mm. In some other embodiments, the width, length, and thickness or height of the charge block **9000** can be different than that illustrated. In some embodiments, the charge can be positioned substantially evenly spaced within the chamber block. For example, in some embodiments, the charges can be positioned so as to include a center to center distance between the each adjacent charge block of about 9 mm. Further, in some embodiments, the primer end of the charge block **9000** can include a spacing of about 1.6 mm between the primer end of each end positioned charge block **9000** and the edge of side edge of the charge block **9000**.

In some embodiments, each charge within a charge block **9000** can comprise at least one projectile **9400**, one or more propellants, and at least one primer charge. In some embodiments, the charge blocks **9000** can comprise Kevlar or carbon fiber composites, providing very lightweight blocks that can be stronger than steel. In some embodiments, the charge blocks **9000** can be a generally flat rectangular shape enabling them to be stacked like pancakes into a magazine similar in size and shape to an ordinary box magazine (such as magazine **1750** described earlier). In some embodiments of the invention, a magazine about the same length as an M16 (i.e., about 7 inches) can be used. This type of magazine can hold as many as **70** shots, and can be no heavier than a conventional M16 magazine of this size. In some embodiments, the charge blocks **9000** can utilize a pre-assembled cartridge, such as a .22 WMR cartridge. This type of cartridge fires a projectile of similar diameter and weight to a .556 NATO round, but at a lower pressure and velocity. The lower pressure can allow the charge block **9000** to be machined from a light alloy such as an aluminum alloy, and are reloadable to facilitate development and testing. In some embodiments, alloying elements can include other light weight metals, such as magnesium, copper, zinc, or chromium. In some further embodiments, heavier metals, such as iron (steel), zirconium, tungsten, and other rare earth metals can be used.

Some embodiments of the invention can include a charge block **9000** with a charge that comprises one or more reinforced bobbins and at least one pressure vessel. In some embodiments, an individual reinforced bobbin can be a self-contained segment comprising a pressure vessel of the charge block **9000** that enclosed a projectile. In some embodiments, several different bobbin types can be used. For example, FIG. **20**C illustrates a cross-sectional view of a bobbin **9500** of a charge block **9000** according to one embodiment of the invention. In some embodiments, the bobbin **9500** can comprise a "type **1**" bobbin that can comprise rectangular flanges with recessed areas. Further, in

some embodiments of the invention, the bobbin **9500** can comprise a "type **2**" that can comprise a square, flat faced flange (i.e., with no recessed areas), and can otherwise comprise a structure that is identical to the "type **1**" bobbin. For example, FIG. **20**D illustrates a perspective view of a bobbin **9600** of a charge block **9000** according to one embodiment of the invention. Further, FIG. **20**E illustrates a perspective view of a bobbin **9700** of a charge block **9000** including tapered edge **9710**. In some embodiments, bobbins **9600**, **9700** can be coupled into an assembly forming a charge block. For example, FIG. **20**F is a perspective view of a charge block **9800** assembled using the bobbins of FIGS. **20**D-**20**E in accordance with some embodiments of the invention.

In some embodiments, the bobbin **9600** shown in FIG. **20**D can comprise dimensions of about 13 mm by 14.5 mm by 55 mm. Further, in some embodiments, the wall of the bobbin **9600** can comprise a thickness of about 2 mm. In some embodiments, the bobbins **9500**, **9600**, **9700** can include burst strengths of about 175,740 psi. In some embodiments, the bobbins **9500**, **9600**, **9700** can comprise a main body including a primer end and a projectile end. In some embodiments of the invention, bobbins can comprise a dumbbell shape. In some embodiments, the main body can comprise cylindrical center sections, and can include one or more flanges. Various types and shapes of flanges can be used depending on the characteristics of the propellant and one or more features of the firearm system **10**. For example, in some embodiments, the bobbins can differ only in the flanges positioned at each end of the bobbin. As an example, in the cross-sectional view of the bobbin **9500**, the projectile **9400** is shown positioned in the projectile end **9510**, and the opposite end of the bobbin **9500** comprises the primer end **9520**. In some embodiments, the primer end **9520** can comprise a primer pocket with a flash hole. Further, the primer pocket can be coupled to a propellant chamber **9550** extending from the primer end adjacent to the primer pocket through at least a partial length of the bobbin **9500**. In some embodiments, a projectile **9400** can be positioned within the bore of the bobbin **9500**. In some embodiments, the projectile **9400** can comprise a first end **9400***a* positioned adjacent to the propellant. Further, a second end **9400***b* can comprise the projectile tip that extends towards the projectile end **9510** of the bobbin **9500**.

Some embodiments of the invention can include methods of manufacturing charge blocks **9000**. In some embodiments, each bobbin for a charge block **9000** can include a fiber/epoxy composite reinforcement. In some embodiments, the bobbins **9500**, **9600**, **9700** can comprise an anodized metal alloy. In some further embodiments, the anodized alloy bobbins are wound with a continuous strand of aramid or carbon fiber epoxy composite to form a strong reinforcement cylinder encasing the propellant chamber. In some embodiments of the invention, bobbins (such as bobbins **9500**, **9600**, **9700**) comprising steel or steel-based alloy can be wet wound with a parallel orientation continuous filament aramid and/or carbon fiber polymer composite reinforcement cylinder to a specified diameter. In some embodiments, the cast fiber polymer composite main body of the charge block **9000** can add reinforcement and physical protection to the imbedded reinforced bobbins. In some embodiments of the invention, after curing, reinforced bobbins are assembled into an alignment jig. In some embodiments, the assembled set of bobbins is wet wrapped with two adjacent parallel orientation continuous filament aramid or carbon fiber polymer composite reinforcement bands to a specified thickness. In some embodiments, after curing, the assembled and aligned bobbin set can be removed from the jig and installed into a resin transfer precision die mold.

In some embodiments of the invention, non-directional fiber reinforced polymer can be pressure injected into the evacuated mold to fill the spaces between and around the assembled bobbins, forming the edges, slots, grooves and other surface features.

Some embodiments of the invention include methods to form reinforced bobbins by assembly together in a die mold. In some embodiments, a charge block **9000** can be fabricated using non-directional fiber reinforced epoxy that is injected into a die mold to form a completed charge block **9000**. In some embodiments, flanges comprising a metal alloy are exposed on each end, and all other exterior features are molded.

In some embodiments of the invention, one or more castellation matching sockets can be incorporated (see for example FIGS. **19** showing castellations **9450**). Some embodiments of the invention include charge blocks **9000** including recessed areas that interlock with matching raised bosses on a breech end **265** of the barrel **250** and recoil shield **3300** when in battery. In some embodiments, tapered edges can help to ensure correct alignment of the charge block **9000** with the bores **260** of the firearm system **10**. In some embodiments, one or more castellations **9450** can fit matching sockets on adjoining charge blocks **9000** to facilitate alignment and stacking. In some embodiments, charge blocks **9000** can snap together for rapid loading, but can be separated by the action for individual ejection within the firearm system **10**. In some embodiments, the castellations **9450** can also provide tactile confirmation of the orientation of the charge block **9000**. Further, in some embodiments, asymmetric keyways can be added to one or more edges of the charge block near guide slots to help ensure correct orientation when loading.

In some embodiments, each bobbin can be loaded with a primer, propellant and projectile. Intended for multi-bore firearms, charge blocks **9000** can be assembled from two or more bobbins (e.g., such as bobbin **9600** or bobbin **9700**). As a result, in some embodiments of the invention, the charge block **9000** can include one or more guides, slots, or grooves to facilitate loading, coupling, alignment, and transport within the firearm system **10** (e.g., such as when stored and transporting within the ammunition magazine **1750**. For example, in some embodiments, the block body **9025** can comprise at least one guide rail slot **9150**, and/or at least one feed groove **9200** positioned in the sides **9125**. Referring to FIGS. **19**, **20**A-**20**B, in some embodiments of the invention, the charge block **9000** can comprise a plurality of feed control grooves **9200** positioned on each side of the charge block **9000**. For example, FIGS. **19** shows one example of a charge block **9000** including feed control grooves **9200** positioned on each side of the chamber block (shown one side in the perspective view). In some embodiments, the feed control grooves can be slanted. For example, in some embodiments, the feed controls grooves can slant towards the projectile end of the charge block **9000**. In this instance, with regard to the primer end feed control grooves **9200**, the distance between the bottom edge of the primer end feed control grooves (at the bottom face of the chamber block) and the primer end of the charge block **9000** can be about 8 mm, and the distance between the top edge of the primer end feed control grooves (at the top face of the charge block **9000**) and the primer end of the charge block **9000** can be about 5 mm. Further, in regard to the projectile end feed control grooves **9200**, in some embodiments, the distance between the bottom edge of the projectile end feed control

grooves **9200** (at the bottom face of the chamber block) and the projectile end of the charge block **9000** can be about 2 mm, and the distance between the top edge of the projectile end feed control grooves **9200** (at the top face of the charge block **9000**) and the projectile end of the charge block **9000** can be about 5 mm.

In some embodiments, as the charge block **9000** is transported within the ammunition magazine **1750**, movement of the charge block **9000** can be guided by the at least one guide rail slot **9150**. Further, in some embodiments, as the charge block **9000** is transported within the ammunition magazine **1750** into the receiver complex **2000**, the at least one feed groove **9200** can facilitate feeding of the charge block **9000** into the feedport **2500**. Further, in some embodiments, the charge block **9000** can comprise an ejection ramp **9250** (shown in FIG. **20**A) positioned on the sides **9125** to facilitate ejection of the charge block **9000** from the firearm system **10**. Further, in some embodiments, the recoil face **9135** of the charge block **9000** can comprise one or more surfaces or structures to facilitate coupling, alignment, and feeding of the charge block **9000** within the receiver complex **2000**. For example, in some embodiments, the charge block **9000** can comprise at least one recessed area **9300** and at least one tapered edge **9350** positioned adjacent the sides **9125**.

In some embodiments, coupling and alignment of charge blocks **9000** (e.g., to form a plurality of charge block **9050**) can be facilitated by one or more surfaces, sides, and/or structures coupled to or integrated with the charge block **9000**. For example, in some embodiments, the charge block **9000** can comprise at least one castellation **9450** extending from at least one of the surfaces **9100**. In some embodiments, multiple charge blocks **9000** can be coupled to form a plurality of charge blocks **9050**. The plurality of charge blocks **9050** can provide a convenient storage of charge blocks **9000**, and/or can enable a user to transport and load more than one charge block **900** into the firearm system **10**. For example, FIG. **20**A illustrates a rear-side perspective view of a stack of charge blocks (plurality of charge blocks **9050**) in accordance with some embodiments of the invention, and FIG. **20**B illustrates a front-side perspective view of a stack of charge blocks (plurality of charge blocks **9050**) in accordance with some embodiments of the invention. In some embodiments, the plurality of charge blocks **9050** can comprise two or more charge blocks **9000** that are at least partially coupled using the at least one castellation **9450**.

In some embodiments, one or more charge blocks **9000** of the plurality of charge blocks **9050** can include at least one projectile **9400**. For example, in some embodiments, the charge block **9000** can comprise at least one projectile **9400** positioned in any one of the first chamber **9425***a*, the second chamber **9425***b*, the third chamber **9425***c*, the fourth chamber **9425***d*, or the fifth chamber **9425***e*. In some other embodiments, the charge block **9000** can comprise two or more projectiles **9400**. For example, in some embodiments, the charge block **9000** can comprise a fully loaded charge block where a projectile **9400** is positioned in each of the chambers **9425***a*, **9425***b*, **9425***c*, **9425***d*, and **9425***e*. Further, in some embodiments, the plurality of charge blocks **9050** can be full charged when each of the charge blocks **9000** comprise chambers **9425***a*, **9425***b*, **9425***c*, **9425***d*, **9425***e* that include a projectile **9400**.

In some embodiments, the projectile **9400** can comprise any conventional bullet. For example, in some embodiments, the projectile **9400** can comprise a conventional round, flat, or tipped nose bullet comprising conventional bullet materials such as lead or copper. In other embodiments, the projectile **9400** can comprise a nose configured to penetrate and expand on impact. For example, in some embodiments, the projectile **9400** can comprise a soft-point, hollow-point, bronze-point, or open point expanding bullet. In some embodiments, the projectile **9400** can comprise a lead alloy, such as a lead alloy hardened with antimony. In some embodiments, the projectile **9400** can comprise a jacketed or semi-jacketed bullet. For example, in some embodiments, the projectile can comprise a copper-alloy or aluminum jacket.

In some embodiments, a single charge block **9000** or plurality of charge blocks **9050** can be positioned to be loaded into the firearm system **10** using the ammunition magazine **1750**. For example, FIG. **21** illustrates a partially loaded ammunition magazine **1750** coupled to the firearm system **10** in accordance with some embodiments of the invention. As shown, in some embodiments, the ammunition magazine **1750** can be at least partially loaded with charge blocks **9000** and positioned to be fed into the feedport **2500** of the receiver complex **2000** of the firearm system **10**. In some embodiments, an operator can install at least one charge block **9000** into the main housing **1760** of the ammunition magazine **1750** coupled to the firearm system **10**. In some embodiments, charge blocks **9000** can be fed into the receiver complex **2000** at least partially using force applied by the magazine spring **1900**. In some other embodiments, an operator can manually feed charge blocks **9000** into the ammunition magazine **1750** as the charge block **9000** are fed into the feedport **2500**. In some other embodiments, an operator can manually feed charge blocks **9000** into the feedport **2500** of the firearm system **10**.

In some embodiments of the invention, the firearm system **10** can discharge one or more projectiles **9400**. For example, in some embodiments, a projectile **9400** can be discharged from any of the chambers **9425***a*, **9425***b*, **9425***c*, **9425***d*, **9425***e* that include a projectile **9400** (i.e., that are in a loaded state). Upon discharge, one or more projectiles **9400** exiting from a charge block **9000** can travel out of the firearm system **10** through at least one bore positioned in at least one barrel **250**. In some embodiments, projectiles **9400** can be sequentially discharged from a charge block **9000** positioned in the firearm system **10**. In other embodiments, more than one projectile **9400** can be discharged from the charge block **9000** at substantially the same time. For example, in some embodiments, two or more projectiles **9400** can be discharged from the charge block **9000** at substantially the same time. In some embodiments, all projectiles **9400** of the charge block **9000** can be discharged from the charge block **9000** at substantially the same time.

Some embodiments of the invention include a firearm system barrel **250**, and methods of manufacture of the firearm system barrel **250**. Some embodiments of the invention include a multi-bore, selective-fire, high capacity firearm system **10**. For example, in some embodiments of the invention, the firearm system **10** can comprise multiple bores within a single barrel. In some embodiments, the bores can be arranged planar and parallel in a vertical array. In some other embodiments, the bores can be arranged planar and parallel in a horizontal array. For example, FIG. **22** illustrates a barrel **250** of the firearm system **10** in accordance with some embodiments of the invention. In some embodiments, the barrel **250** can comprise a barrel body **255** including bores **260** through which a projectile **9400** can enter from the charge block **9000** and exit the firearm system **10**. The example embodiment shown in FIG. **22** includes a total of five bores **260** stacked vertically. Other embodiments of the invention can include more or less numbers of bores

260. For example, some embodiments can comprise four bores 260 or less than four bores 260. Other embodiments can include six or more bores 260. Further, in some embodiments, the bores 260 can be arranged side-by-side horizontally.

In some embodiments of the invention, the barrel 250 can include lightweight arrangements with a hard steel core and a complex cast outer housing (for cooling and structural support). For example, some embodiments of the invention include a barrel 250 that can comprise an inner core of hard steel, through which the bores 260 pass. In some embodiments, the inner core is embedded in a cast light alloy casing. For example, some embodiments of the invention comprise a barrel 250 that comprises an inner core with bores 260 comprising steel or steel-based alloy, or nickel or nickel-based alloy (e.g., including beryllium nickel) that is embedded in a cast light alloy casing comprising an aluminum-based alloy.

Some embodiments of the invention include methods of barrel fabrication using a process that includes the use of commercially available computer-controlled electrical discharge milling (hereinafter "EDM"). EDM is extremely accurate and induces virtually no stress into the work piece. This can eliminate a major constraint of the existing lathe-based boring methods (such as turning, boring, drilling, milling, etc.), and can permit great flexibility in barrel design. Traditional methods of barrel fabrication require a symmetrical cylindrical barrel blank, subsequent stress relief, bore drilling, further stress relief, rifling, and additional stress relief, followed by a limited amount of exterior machining. In some embodiments of the invention, barrels of almost any configuration and material can be fabricated, stress relieved, and then finally bored and rifled. Because the EDM machining induces virtually no stress in the barrel 250, straight bores 260 can be made and aligned. Multiple bores 260 bring the power and ammunition capacity of several single-bore rifles together into one weapon with little, if any, weight penalty. For example, in the case of five bores 260 shown in the example embodiment of FIG. 22, the power of five guns can be achieved with a weight of one traditional weapon.

In some embodiments of the invention, projectiles 9400 that have been discharged can exit the charge block 9000 and enter at a bore 260 of the barrel 250 of the firearm system 10 prior to exit from the firearm system 10. The bores 260 and their entry and exit of the barrel 250 can be seen more clearly in FIGS. 23 and 24, and can comprise a first bore, 260*a*, a second bore 260*b*, a third bore 260*c*, a fourth bore 260*d*, and a fifth bore 260*e*. For example, FIG. 23 illustrates a breech end 265 of the barrel 250 of FIG. 22 in accordance with some embodiments of the invention, and FIG. 24 illustrates an end of the barrel 250 of FIG. 22 including a muzzle 270 in accordance with some embodiments of the invention. In some embodiments, the breech end 265 of the barrel 250 can comprise a face 268 that includes one or more channels or conduits for transport of gases and other vapors. In some embodiments of the invention, one or more of the bores 260 of the breech end 265 can comprise one or more gas conduits at least partially encircling at least one of the bores 260. For example, in some embodiments, one or more of the bores 260 of the breech end 265 can include gas rings 5230 at least partially encircling one or more of the bores 260. Further, in some embodiments, the face 268 of the breech end 265 can comprise one or more vent channels (vents 5225) extending from the one or more gas conduits and/or gas rings 5230. In some embodiments, one or more of the vents 5225 can extend to the edge or the face 268. Further, in some embodiments, the gas ring 5230 can include a diameter that is greater than the outer diameter of the forcing cone 5220 of the breech end 265 (see FIG. 14) so that the gas ring 5230 can be positioned to exhaust gases from and away from the bores 260. In some embodiments, the profile of the gas rings 5230 can be shaped to provide improved gas flow and/or to enable the use of various manufacturing techniques. In some embodiments, the profile of the gas rings 5230 can be curved or rounded. In some further embodiments, the profile of the gas rings 5230 can comprise a groove-like cross-section. In some other embodiments, the profile of the gas rings 5230 can comprise a square or rectangular cross-section.

Some embodiments include a method of assembly of the firearm system 10. For example, FIG. 25 illustrates an assembly readiness process for the firearm system 10. In some embodiments, the firearm system 10 of FIGS. 1-3 can comprise a modular assembly 10000, including assembly starting from a bare receiver (shown as receiver step 10100). In some embodiments, the assembly process can proceed with pressing in brushing locating pins, and inserting spring followers, feed control rebound springs, and rebound spring set screws. Further, from an open (forward) end of receiver 4000, the operator can slide the feed control carriage 5200 into corresponding receiver grooves until seated against rebound spring followers. The assembly can proceed with assembly of right and left-side plates. For example, the step of right-side plate 10200 can include an operator sliding a compression spring onto a loading ratchet shaft, inserting the ratchet with spring into side plate, and repeating for a second ratchet. Further, the assembly can comprise installing the ratchet lever into the side plate, and ensuring ends are engaged with both loading ratchet shafts. The operator can install pivot screws, insert a detent compression spring and detent pin, and repeat for a second detent pin. Further, the assembly can comprise installing a load knob glide track, load knob, load knob glide pad and glide pad screw. The operator can then fasten the assembled right side plate 425 to the receiver 4000, and link the load knob to the feed control carriage 5200 with the load knob screw. The operator can continue assembly of the firearm system 10 by proceeding with an assemble left side plate 10300, and can install recoil shield glide pads, insert a magazine follower finger compression spring and cam lever latch pin, and install follower a finger and finger pivot pin. In some embodiments, the operator can proceed with a continue receiver assembly (step 10400), and place an action cam 5200 transversely within the receiver 4000, while engaging camshaft timing pins with respective feed control carriage bridge 5205 timing slots. In some embodiments, the operator can position a camshaft against a cam brushing with the cam lever directly opposite the feed control carriage bridge 5205. The operator can place a recoil shield 3300 within the feed control carriage 5200 with recoil face oriented toward the forward (open) end of the receiver 4000, and with return spring holes 3380 visible. The operator can position the recoil shield 3300 against the camshaft 5425, and install the recoil shield return leaf spring. An installation of a right side plate 425 (step 10500) can proceed with the operator placing the cam lever slot over the cam lever 5500, and positioning the right side plate 425 onto the receiver 4000 over the recoil shield 3300 and camshaft 5425. The operator can then push and hold fully to the rear to preload recoil shield return spring, and install fasteners. In some embodiments, proceeding with a forward receiver step 10600, the operator can fasten upper and lower the halves of the forward receiver 300 together over the breech end 265 of the barrel 250,

ensuring the barrel bosses are fully seated in forward receiver **300** section of the receiver complex **2000**. The operator can place the firing pin return spring into the return spring pocket in the receiver **300**, and insert the firing pin through return spring and into the receiver and action until the firing pin flange contacts the return spring. The operator can repeat for all firing pins **10700**. In some embodiments, the operator can proceed with a striker array step **10800** where the operator can thread the striker coil assembly **3000** into the striker coil plate **3150**. The operator can insert the striker spring **3110** and striker **3160** into the coil assembly **3000**, repeat with remaining coils **3050** and strikers **3160**, and fasten the assembled array to receiver **4000** atop firing pin flanges.

In some embodiments, a receiver annex and buttstock step **10900** includes threading the stock tube **1300** into receiver annex **5000**, and sliding the stock adapter over the tube to engage with receiver annex **5000**. The operator can fasten the conduit adapter to the electronic chassis **1200** and insert the assembly into the stock adapter. In some embodiments, the operator can then align the buttplate with the receiver annex **5000**, fasten it to the stock tube **1300** and electronics chassis **1200**, and install a conduit lock screw. In some embodiments, the operator can install circuit board mounting grommets into electronics chassis **1200**, fasten coil driver and controller circuit boards on opposite sides of mounting grommets (driver board **1470** and trigger board **1410**), with the coil driver board **1470** to the right, the trigger controller board **1410** to the left, and electronic chassis **1200** in between.

In some embodiments, the operator can fasten the driver board cover to electronic chassis **1200**, fasten the action rod mounting bracket to the receiver annex **5000**, and insert a spring nut compression spring and action rod spring nut into mounting bracket. In some embodiments, the operator can then proceed to assemble the slide action rod expansion spring onto action rod, install a rod spring anchor screw, slide the action rod through mounting bracket and rod spring nut, thread the action rod spring into rod spring nut three turns, and thread the action rod thumb pad **475** onto action rod. Proceeding with the trigger housing step **11100**, in some embodiments, the operator can fasten the trigger guard **560** to the trigger housing **545**, temporarily position the pistol grip **500** on the trigger housing **545**, and press the set switch and trigger switch circuit boards into respective mounts and fasten mounts to trigger housing **545**.

In some embodiments, the operator can proceed with trigger assembly and installation in step **11100** by inserting set switch and trigger switch impulse pistons into respective pockets in trigger body **620**. In some embodiments, the operator can cover both with a duplex leaf spring, and fasten the spring to trigger **600**. The operator can then insert a trigger rebound spring into trigger housing **545**, and slide the trigger body **620** through a slot in the housing **545**. In some embodiments, the operator can then rotate the trigger to preload rebound spring, and install the pivot bolt. In some embodiments, using the wiring harness step **11200**, the operator can pass the pigtail from control board and reset switch through the conduit, the receiver annex access port, the trigger housing **545** and the pistol grip **500**. Further, in some embodiments, the operator can pass the trigger and reset switch pigtails through receiver annex access port and conduit to the control board. In some embodiments, the operator can then pass striker coil leads through conduit to driver board output pigtail, and pass the striker coil common through the access port, trigger housing **545**, and pistol grip **500**. With harness **575** in place, the operator can temporarily separate the pistol grip **500** from the trigger housing **545**.

In some embodiments, in the modules step **11300**, the operator can position the receiver annex/buttstock assembly over the striker array and fasten securely to receiver **4000**. The operator can fasten the trigger housing **545** to the assembled receiver/receiver annex **5000**, fasten the pistol grip **500** to the trigger housing **545**, connect the harness **575** to an external power port socket, and fasten the socket to the pistol grip **500**. Further, in some embodiments, the operator can position the optics rail **950** along the top of the receiver complex **2000**, and fasten the rail **950** loosely to the receiver annex **5000**. In some embodiments, the operator can position the forward receiver **300** and barrel **250** assembly into the receiver/receiver annex assembly, and loosely fasten the forestock Picatinny rail **850** and receiver **4000** to the forward receiver **300**. In some embodiments, the operator can then fasten the optics rail **950** and receiver **4000** to the forward receiver **300**, and fasten the forestock Picatinny rail **850** to the trigger housing **545**. The operator can then torque to specified values all fasteners, and attach the control board cover to electronic chassis **1200**.

Some embodiments of the invention include an assemble magazine step **11400** where an operator can fasten at least one quick release latch **1790** to base ring **1840** coupled to the main housing **1760** at one end of ammunition magazine **1750**. In some embodiments, the operator can slide a magazine spring **1900** over a magazine follower spring guide cup to position the magazine spring **1900** in the main housing **1760**. In some embodiments, the operator can position the follower on the magazine guide rails, and press the magazine spring **1900** and follower entirely through the main housing **1760** until follower contacts end stops. In some embodiments, the operator can then slide the magazine end cap guide cup into the protruding compression magazine spring **1900**, and preload the magazine spring **1900** by pressing the end cap into the main housing **1760**, and install fasteners. Finally, in some embodiments, the operator can proceed with an install magazine step **11500**, and push the magazine **1750** fully into the receiver loading port (feedport **2500**) until the base ring **1840** contacts the receiver **4000** and the quick release latches **1790** click into position.

In some embodiments of the invention, in order to propel one or more projectiles (such as projectile the **9400**) when discharging the firearm system **10**, the firearm system **10** can be coupled to an ammunition assembly such as magazine **1750**. In some embodiments, the ammunition assembly can be prepared using one or more charge blocks **9000** (shown in FIG. **19** and described earlier). In some embodiments, the charge blocks **9000** can be prepared from conventional ballistic materials including for example propellant, primer, a housing (such as the the block body **9025**), and at least one projectile such as projectile **9400**. A method of assembly of at least one charge block **9000** is shown in FIG. **26**, illustrating an ammunition assembly step **15000** in accordance with some embodiments of the invention. In some embodiments of the invention, the ammunition assembly step **1500** can proceed as a charge block assembly **15100** step, in which single or multiple charge blocks **9000** can be prepared by loading into a conventional ammunition press. In some embodiments, the ammunition assembly **1500** can comprise a primer set press-in step **15200**. For example, in some embodiments, one or more primer charges can be assembled into one or more of the plurality of chambers **9425** of a charge block **9000**. In some embodiments, primer charges are loaded into all empty primer pockets. For example, in some embodiments, primer can be loaded into

all of the chambers **9425***a*, **9425***b*, **9425***c*, **9425***d*, **9425***e*. In some embodiments, the primer is used to initiate ignition of a propellant, which is assembled into the charge block **9000** during the propellant charge set **15300**. During this step, a measured quantity of selected propellant can be loaded into empty propellant chambers **9425***a*, **9425***b*, **9425***c*, **9425***d*, **9425***e*. Further, one or more projectiles **9400** can be selected and loaded into at least one of the plurality of chambers **9425** of a charge block **9000** during a press-in projectiles step **15400** to prepare the loaded charge block **9000** in step **15500**. In some embodiments, the ammunition assembly step **15000** can include single charge block assembly step **15600** and/or a multi-stack charge block assembly **15700**. For example, in step **15600**, fully or partly loaded charge blocks **9000** can be independently inserted into the firearm system **10**. In some further embodiments of the invention, step **15700** can comprise assembly of charge blocks **9000** that can be snapped together (or otherwise attached to each other or to a support structure) prior to loading into the firearm system **10** to facilitate the loading process. Example embodiments of assemblies of charge blocks of this type can be seen in FIGS. **20**A-**20**B. In this instance, pre-assembled batteries of charge blocks **9000** can be correctly orientation to one another and can be inserted as a unit (plurality of charge blocks **9050**) into the firearm system **10**.

In some embodiments of the invention, prior to discharging the firearm system **10**, an operator can proceed with at least one operation procedure to check or monitor of at least one component of the firearm system **10** and/or to configure the firearm system **10** to a readiness to fire state. For example, FIG. **27** illustrates a firearm system **10** start up and readiness to fire procedure in accordance with some embodiments of the invention. In some embodiments, the operator, with the firearm system **10** provided, can proceed with operator procedure **20000** by performing an initial assessment of the firearm system **10** (shown as assess system step **20100**). In some embodiments, the assess system step **20100** can include an assess system condition to ensure action is locked-open, ensure safety is in the "safe" position. In some embodiments, the operator can then connect a power cable to the power port **590** to provide external power, and can then load ammunition into the firearm system **10**. In some embodiments, the operator can proceed with an activate load knob step **20200**. Further, in some embodiments, the operator can proceed with load ammunition step **20300**. In some embodiments, the operator can activate the load knob in step **20200** by pulling the load knob **400** fully to the rear until a "click" (or other noticeable feedback) is felt. Ammunition loading can proceed by inserting individual or pre-assembled groups of charge blocks **9000** into the loading port (feedport **2500**) of the receiver **4000**. Subsequently, in some embodiments, the operator can proceed with release load knob step **20400**. An operator can then grasp the firearm system **10** using a grasp pistol grip step **20500**, and ready the firearm system **10** to fire by executing the release safety step **20600**.

In some embodiments of the invention, the firearm system **10** can be operated in using an operator selectable single-action mode, a semi-automatic action mode, and/or in an automatic action mode. FIG. **28**A illustrates a semi-automatic operational process of the firearm system **10** of FIGS. **1**-**3** in accordance with some embodiments of the invention. In some embodiments, the semi-automatic mode of operation of the firearm system **10** can comprise a semi-auto process **30000** that can proceed as a series of steps using one or more controllers of the firearm system **10**.

Some embodiments include a separate firing pin, an electromagnetic striker, and a drive transistor provided for each bore. In some embodiments of the invention, a single operator controlled trigger **600** can activate alternately one of a pair of normally open single pole single throw momentary tactile micro switches. In some embodiments of the invention, when the trigger **600** is forward, one switch is held closed and completes a circuit to charge a capacitor, and the other switch remains open. In some embodiments, as the operator pulls the trigger **600** to the rear, the closed switch opens first, and then the other switch closes.

In some embodiments of the invention, the capacitor discharges through the closed switch, a resistor, and an optoisolator to define a single, reliable, consistent square-wave pulse of intended potential and duration. In some embodiments, the clean pulse can then serve to directly control the switching of the solid state relay, and simultaneously stimulate the controller. The controller can then sequentially direct a signal to enable each drive transistor in turn, advancing one step per pulse until the series is complete, then immediately or promptly resetting.

In some embodiments of the invention, the solid state relay, various drive transistors and associated electromagnetic strikers can be coupled in series parallel with the high energy DC power source. In some embodiments, the synchronous switching of the solid state relay in combination with one of the various drive transistors can direct a clean high current pulse to the electromagnetic striker coupled to that particular drive transistor. Thus, in some embodiments, each trigger **600** pull pulses only one electromagnetic striker at a time, advancing through the sequence until all the various strikers have been pulsed in the order of their respective positions in a desired sequence. In some embodiments, enabled by the final pulse of the sequence, the controller can immediately reset to its initial state. In some embodiments of the invention, the reset signal can activate an action electro-activator to replace an emptied or partially emptied charge block with a fresh one.

In some embodiments of the invention, each electromagnetic striker contains a solenoid which converts the high current pulse into a temporary magnetic field. In some embodiments, a pair of linear, cylindrical iron cores within the solenoid (one stationary and the other dynamic) can be separated by an air gap and a compression spring. In some embodiments, the presence of the magnetic field converts the two cores into temporary magnets of opposite polarity across the air gap. In some embodiments, under the influence of the magnetic field, the dynamic core can move to close the air gap, compressing the spring. Further, in some embodiments, absent the magnetic field, the compressed spring can expand, accelerating the dynamic core to strike the corresponding firing pin.

Referring to the semi-automatic process **30000** of FIG. **28**A, in some embodiments, the firearm system **10** can include at least one circuit designed for semi-auto multi-bore firearms such that each trigger **600** pull discharges one of the various bores **260** in a set order until all have been discharged. Further, as part of the semi-automatic process **30000**, some embodiments include a mains **30050** comprising a dual voltage power supply with common ground. In some embodiments, mains **30050** can include a high voltage (+36-54 VDC) side to energize electromagnetic strikers and a low voltage (+11-14 VDC) side to power the electronics of the firearm system **10**. Further, some embodiments include a manual reset **30100**. In some embodiments, a normally closed single pole single throw momentary switch can be wired to interrupt power to the front end (trigger circuit)

resulting in a power on clear ("POC") reset (shown as power on clear **30150**) to an initial state in the firing sequence. Further, in some embodiments, it can route power to a phototransistor within an optoisolator.

In some embodiments of the invention, the power on clear **30150** includes an RC circuit that provides a positive signal level pulse to reset terminal of a **4017** controller to ensure initial state condition on start up or manual reset. Some embodiments include a +5 VDC power supply **30200** that can comprise a 11-14 VDC input, +5 VDC output, and provides regulated power to the front end.

Some embodiments of the invention include a mechanical trigger forward **30250**. In some embodiments, an operator controlled mechanical trigger **600** is normally held in the forward position by a trigger rebound spring. In some embodiments, the mechanical trigger forward **30250** controls a pair of single pole single throw momentary switches. In some embodiments, one switch is held closed when in forward position, and the other switch remains open.

Some embodiments of the invention include a charge capacitor **30300**. In some embodiments, a closed forward-trigger switch completes the circuit from the power supply to a charge capacitor in the front end. In some embodiments, a pull down resistor ensures a ground state of circuit absent intended charge voltage. In some further embodiments, a series resistor value regulates capacitor charge time.

Some embodiments include a trigger pull mechanism **30350**. Some embodiments include an operator controlled motion of the mechanical trigger **600** from the forward position ("charge" switch closed, "discharge" switch open) to the rearward position ("charge" switch open, "discharge" switch closed) with a segment within the range of motion where both switches are open. In some embodiments, the firearm system **10** can be controlled so that at no point in the range of motion is it possible for both switches to be closed simultaneously.

Some embodiments include a capacitor discharge **30400**. In some embodiments, once the "trigger pull" closes the "discharge" switch, the charged capacitor can discharge through the switch, current limiting resistor and LED within optoisolator to ground.

Some further embodiments include a time function **30450**. In some embodiments, when connected to ground between the "discharge" switch and a current limiting resistor, the value of the timing resistor controls the discharge rate of capacitor, and therefore the output pulse duration.

Some embodiments include an optoisolator **30500** comprising a light emitting diode proximate to a phototransistor. In some embodiments, the light emitting diode can be energized by a timed discharge of a trigger capacitor that illuminates the phototransistor, and can enable current flow through the phototransistor only when illuminated by LED. In some embodiments, the optoisolator **30500** can electrically isolate +5 VDC trigger circuit from +12 VDC (nom.) controller, driver and SSR circuits. Further, in some embodiments, the optoisolator **30500** can directly translates a +5V signal level pulse from the trigger **600** into a +12V pulse of sufficient current to directly enable SSR transistor, and to simultaneously stimulate the clock input of a controller (such as synchronous decade counter **4017** I/C shown as controller **30550**.)

In some embodiments, the controller **30550** can be utilized to individually enable the various drive transistors in a predetermined repeating sequence. For example, referring to FIG. **28**B, showing a schematic of decade counter **30990**, in some embodiments, this can function in conjunction with the solid state relay to control the timing and distribution of the heavy current pulses required to operate the electromechanical strikers. In some embodiments, the decade counter **30990** can illuminate the annunciators **1425** to display the changing status of the system.

Some embodiments include a current limiting resistor (in some embodiments, 470Ω) **30600**. In some embodiments, the controller output current is insufficient to directly enable a drive transistor. In some embodiments, a high gain Darlington power transistor can be provided to boost current. In some embodiments, the current limiting resistor on the controller output can be used to adjust the Darlington output to properly bias the TIP35NPN bipolar drive transistor (shown as **30650**). In some embodiments, the Darlington NPN transistor **30650** can be required to boost signal level controller output (<10 mA) to 1.0 ADC needed to properly bias a TIP35NPN drive transistor **30700**.)

In some embodiments of the invention, the power transistor TIP35NPN **30700** can act as a switch to route high current pulse from a solid state relay to a particular electromagnetic striker. In some embodiments, conduction can be enabled by a boosted signal output from the controller, synchronous with the solid state relay on the positive transition of the pulse.

Some embodiments of the invention include a solid state relay **30750**. In some embodiments, a heavy duty 75 A switching transistor can be directly controlled by the +12 VDC output pulse from the trigger circuit. In some embodiments, conduction is enabled on the positive transition of the pulse, and disabled on the negative transition. In some embodiments, the solid state relay **30750** can be wired in series with high voltage power supply, the various electromagnetic striker solenoids and their associated drive transistors. In some embodiments of the invention, a conventional ultra-fast clipping and clamping freewheeling diode is employed to eliminate any "ringing" or reverse currents due to the collapse of the magnetic field generated by the solenoid at the negative transition of the pulse.

In some embodiments, solenoid **30800** can include two parallel coils of 28 GFI copper magnet wire, 680 turns each, with a combined DC resistance of 2.8Ω, operating at +56 VDC with a current of 20 A, and resulting in MMF 27.2 k amp-turns. In some embodiments, when energized, the dynamic core (striker) can move to close the air gap, compressing striker spring. In some embodiments, a de-energized striker is released to impact the firing pin.

In some embodiments of the invention, a dynamic core **30850** can comprise a mild steel cylindrical mass accelerated by low-magnetic stainless-steel striker spring. In some embodiments, the dynamic core **30850** can rest against firing pin flange when inactive, and can be contained within a sealed tubular solenoid bobbin. In some embodiments, a clearance between the core and bobbin can permits airflow around the core to reduce friction and other resistance when in motion. In some embodiments, a co-axial suspension with a powerful magnetic field prevents contact with bobbin tube when solenoid is energized, further reducing friction. In some embodiments, full compression of the striker spring is needed to accelerate the core to sufficient velocity to successfully ignite a primer. In some embodiments, an uncompressed striker spring holds the core (striker) in a neutral position at all times except when in actual operation, precluding unintended discharge. In some embodiments, sealed construction prevents liquid or particulate intrusion due to external conditions, ensuring reliability.

Some embodiments include firing pin **30900**. In some embodiments, this transmits impact energy from electromagnetic striker to the charge block primer, initiating igni-

tion of the propellent charge and discharging the firearm. In some embodiments, a large flange on the striker end of the firing pin is confined within a pocket in the receiver limits the range of motion. In some embodiments, it is held in a neutral position away from primer by a return spring. In some embodiments, a ball near the primer end of the firing pin rides in a matching socket in the rear face of the recoil shield **3300**, and can prevent binding due to motion of the recoil shield **3300** and maintain precise alignment of the firing pin tip. In some embodiments, an **0**-ring within recoil shield socket can help to prevent liquid or particulate intrusion into action.

In some embodiments, a current limiting resistor tied to #**5** output **30950** (the output of the controller) correctly biases small signal switching transistor **2N2222**A (voltage follower), increasing current available to operate an RC circuit, and isolating the input to **2N2222**A transistor. Some embodiments also include a voltage follower **3096**. In some embodiments, the RC circuit **30975** (time control) produces a short pulse to the reset input of the controller, resetting the controller to the initial state and energizing the ø output of the controller, illuminating the green "ready" LED in the annunciator display.

In some embodiments of the invention, the firearm system **10** can include at least one selective fire operation. For example, FIG. **29** illustrates a selective fire operational process of the firearm system **10** of FIGS. **1-3** in accordance with some embodiments of the invention. In some embodiments, the operator can utilize a selector switch step **40225** to select a firing mode of the firearm system **10**. For example, in some embodiments, the operator can select a "0" position for semi-automatic fire. In some further embodiments, the operator can select a "1" position for a burst fire operation of the firearm system **10**. In some other embodiments, the operator can select a "2" position for a fully automatic operation of the firearm system **10**. Further, in some embodiments, the selector switch **40225** can also be used to select a "3" position for a power shot mode where the firearm system **10** can discharge a plurality of projectiles **9400** at substantially the same time. For example, in some embodiments, the firearm system **10** can discharge two or more projectiles **9400** that can be fired at substantially the same time. In some other embodiments, where the selector switch **40225** can be used to select a "4" position to enable the firearm system **10** to be operated in a power shot full mode. While in the power shot full mode, the firearm system **10** can discharge all projectiles **9400** from a charge block **9000** at substantially at the same time.

In some embodiments of the invention, after an operator selects a firing mode using the selector switch step **40225**, the firearm system **10** can proceed with a selective fire process **40000**. In some embodiments of the invention, the charge-cap process step **40025** can comprise charging of at least one firing capacitor. In some embodiments, following an open step **40050** and pull step **40075**, the firearm system **10** can include a capacitor discharge step **40100**. In some embodiments, following an optoisolator step **40125**, the firearm system **10** can proceed with a pulse step **40150**. Further, in some embodiments, after a fire control switch step **40175**, and check for a selector switch step **40225** set to mode "0", the firearm system **10** can proceed to a fire control board step **40210** if the selector switch **40225** is not set to mode "0". Further, in some embodiments, the firearm system **10** can then proceed to a controller/sequencer step **40375**, or the firearm system **10** can proceed directly to the controller/sequencer step **40375** if the selector switch **40225** is set to mode "0". In some embodiments, after a firing pulse is directed to forward to driver #_____ in sequence step **40400**, the firearm system **10** can proceed with steps through a 470 ohm-SMT step **40425**, Darlington NPN step **40450**, TIP transistor step **40475**, and Voltage (pwr/batt) step **40500**. In some embodiments, the firearm system **10** can then proceed to an energize coil step **40525**, and finally a striker to firing pin step **40550**.

Some embodiments of the invention can comprise one or more controllers for operating and/or monitoring one or more components of the firearm system **10**. In some embodiments, at least one controller can control and operate one or more firing pins within the firearm system **10**. Further, for example, in some embodiments, at least one controller can control the firing and firing sequence of one or more charges within the charge block **9000**. For example, FIGS. **30-33** illustrate various circuit diagrams that can operate to control at least one function of the firearm system **10**. In some embodiments, one or more of the circuits shown in the circuit diagrams of FIGS. **30-33** can operate independently. In other embodiments, at least two or more of the circuits shown in the circuit diagrams of FIGS. **30-33** can operate together, either serially, or in parallel. For example, FIG. **30** illustrates a schematic of a logic control circuit of the firearm system **10** of FIGS. **1-3** in accordance with some embodiments of the invention. Further, FIG. **31** illustrates a schematic of a solid-state relay control circuit of the firearm system **10** of FIGS. **1-3** in accordance with some embodiments of the invention. Further, FIG. **32** illustrates a schematic of a trigger control circuit of the firearm system **10** of FIGS. **1-3** in accordance with some embodiments of the invention, and FIG. **33** illustrates a schematic of a driver control circuit of the firearm system **10** of FIGS. **1-3** in accordance with some embodiments of the invention.

Referring to FIG. **30**, illustrating a schematic of a logic control circuit **50000**, in some embodiments, the logic control circuit **50000** can be embodied in a 16 pin chip that functions as a counter divider. In some embodiments, the logic circuit can count up based on an input from the front end, and can pass a firing pulse, and illuminate an LED. The visual illumination can let an operator know which coil is getting ready to fire. In some embodiments, every time the logic control circuit **50000** receives a pulse, it can step up to the next position. In some embodiments, using this process, the firearm system **10** can enable an operator to progressively fire one, two, three, four, and five, where the five is the reset, and where the firearm system **10** can pass from a high state back to the reset which repeats the process to enable an operator to repeated progressively fire. In other embodiments, a more fully-featured operator interface such as a graphical user interface can be used.

Referring to FIG. **31**, illustrating a schematic of a solid-state relay control circuit **60000** of the firearm system **10**, in some embodiments of the invention, the relay control circuit **60000** can function as the primary heavy-current switching component of firearm system **10**. Biased directly by the pulsed output of the trigger control circuit **70000**, conduction can be enabled on the positive transition of the pulse and disabled on the negative transition. In some embodiments, wired in series with the high voltage DC power supply can be each drive transistor and its associated striker coil. Precisely timed heavy-current pulses can be directed to any of the various striker coils by the synchronous switching of the SSR and the driver connected to that particular coil. Both the SSR and the selected drive transistor can assume a conductive state on the positive transition of the pulse, but only the SSR assumes a non-conductive state on the negative transition of the pulse. In some embodiments, ultra-fast

diodes are included to control voltage and current that occurs with the coil when the magnetic field collapses on the negative transition.

Referring to FIG. **32**, illustrating a schematic of a trigger control circuit **70000** of the firearm system **10**, in some embodiments, the trigger control circuit **70000** can function as a front end that can operate as a trigger that reliably produces a specific type of pulse only on demand and at no other time. In some embodiments, the trigger control circuit **70000** can be powered by 12 volt input (e.g., with a 78LL5 reducing to 5 volt). In some embodiments, an input switch can charge a capacitor when it is closed (e.g., a 100 microfarad, 25-volt capacitor) that can function as a trigger capacitor. In some embodiments, when the set switch is closed, this capacitor is being charged. In some embodiments, the trigger control circuit **70000** can also include resistors to positively assure a ground state when it is not active, and therefore can be used to avoid spurious signals. In some embodiments, when the set trigger is closed, the capacitor charges and is ready to discharge through the trigger. In some embodiments, when the trigger switch closes, the capacitor discharges through this resistor. In some embodiments, the resistor is tuned to the capacitor to produce a 10 millisecond pulse, and the value can be varied. In some embodiments, the optoisolator can be used as a way to electrically isolate the trigger circuit from the rest of the circuitry. In some embodiments, this can help to avoid any possibility of spurious signals, and prevent the firearm system **10** from discharging without operator input. In some embodiments, the opto-isolator performs this function by linking the two sides of the circuit with an LED, and a photo detector, so that when a pulse passes through the LED, the LED can illuminate for a length of time determined by a resistor. In some embodiments, the length of time can then be translated to essentially an output signal that can be 12 volts. In some embodiments of the invention, during operation, when the switch is in the forward position, and the operator's finger is not on the switch, the set switch can be closed, keeping the capacitor in a charged state. In some embodiments, when the operator starts to pull the trigger **600**, these are both momentarily opened, and then one closes. In some embodiments, when it closes, the capacitor discharges through the resistor, and subsequently the opto-isolator. In some embodiments, this process can enable a reliable pulse comprising a square-wave pulse on the output.

Referring to FIG. **33**, illustrating a schematic of a driver control circuit **80000** of the firearm system **10**, in some embodiments, the drivers are tentative switches that can precisely switch heavy current from the battery pack to the coils. In some embodiments, using a control input that comprises small amplitude signals, a Darlington transistor can provide sufficient energy to switch the main drivers. In some embodiments, the main drivers can switch the heavy current from the battery pack to the coil, and the earlier described solid state relay operating connected in series and both in the on position in order for current to flow. The solid state relay ("SSR") is connected in series with the drivers, which are connected in parallel with each other. In this instance, each driver can independently provide a path to complete a circuit through the SSR and a striker coil to the batteries. In some embodiments, one SSR can include a common to five drivers, each in series with a coil, and the coils can share the other common.

In some embodiments of the invention, the energy needed to operate the firearm system **10** can comprise electric pulses that can actuate electric hammers (strikers **3160**) and rotate a locking cam. In some embodiments, each pulse can fire one shot, and one pulse can unlock the action to replace each charge block **9000**. In some embodiments, the electric pulses are controlled by an electronic sequencer. In some embodiments, a small battery pack (similar to those found in conventional power tools) can store and provide power to produce the pulses. Extensive lab testing of the strikers **3160** has established pulse wave profiles, and thus the resultant energy consumption rate.

In some embodiments, the use of battery power can prevent stoppages due to misfires. In some embodiments, the firearm system **10** can continue to process ammunition regardless of the occurrence of misfires. In some embodiments, an on-board power supply (such as a battery) can provide a standardized voltage power source for one or more electronic accessories. For example, in some embodiments, the power source can be used to power attached flashlights, night scopes, range finders, laser target designators, infrared illuminators, etc. In some embodiments, these devices can include standard mounting rails. In some embodiments, the battery pack can be disposable and/or exchanged for a spare battery pack.

It will be appreciated by those skilled in the art that while the invention has been described above in connection with particular embodiments and examples, the invention is not necessarily so limited, and that numerous other embodiments, examples, uses, modifications and departures from the embodiments, examples and uses are intended to be encompassed by the claims attached hereto. The entire disclosure of each patent and publication cited herein is incorporated by reference, as if each such patent or publication were individually incorporated by reference herein. Various features and advantages of the invention are set forth in the following claims.

The invention claimed is:

1. A firearm system comprising:

a receiver assembly comprising a receiver open at one end extending towards a barrel end of the firearm system;

a barrel coupled to and extending from a forward receiver, the barrel including four or five side-by-side barrel bores arranged with their center axes substantially planar and parallel to each other and longitudinal to the receiver assembly,

the forward receiver coupled or integrated with the open end of the receiver and defining a breech, and

a receiver annex coupled to and integrated with the receiver proximate an operator end of the firearm system, the operator end being located opposite the barrel end of the firearm system,

the receiver annex including electromagnetic striker coils equal in number to the number of barrel bores, wherein each of the electromagnetic striker coils includes at least a portion of a striker extending at least partially into the coil, the striker configured and arranged to be electromagnetically actuated by an electromagnetic field generated by the coil; and

a feed port positioned within the receiver adjacent the open end and the breech.

2. The firearm system of claim **1**, wherein the breech comprises side-by-side breach bores equal in number to the number of barrel bores, the breech bores arranged with their axes substantially planar and parallel to each other and longitudinal to the receiver assembly.

3. The firearm system of claim **2**, further comprising a detachable ammunition magazine coupled to the receiver assembly adjacent the feed port, the ammunition magazine configured and arranged to sequentially feed a number of charge blocks into the feed port.

4. The firearm system of claim 3, wherein the ammunition magazine comprises at least one charge block, the at least one charge block including side-by-side charges equal in number to the number of barrel bores, wherein the at least one charge block is configured and arranged to serve as a container for the charges and to act as a pressure vessel for each of the charges.

5. The firearm system of claim 4, wherein each of the charges is positioned substantially collinear to one of the breech bores, and comprises a projectile facing the breech of the barrel, propellant and primer.

6. The firearm system of claim 4, wherein the at least one charge block comprises:

two opposing faces, the faces square or rectangular in shape; and

four elongated rectangular sides;

three or four circular castellations arranged in an asymmetric pattern on one face of the two opposing faces such that two or more of the at least one charge blocks may be snapped together forming a stack of charge blocks, the asymmetric pattern ensuring a specific orientation of the charge blocks to each other; and

wherein the stack of charge blocks may be loaded through the feed port into the ammunition magazine as a unit, and further are separable by pins or projections of a feed control carriage of the receiver assembly.

7. The firearm system of claim 4, wherein the detachable ammunition magazine comprises:

a square or rectangular cross-section;

an opposing pair of internal guide rails, the guide rails configured to engage matching grooves of the at least one charge block;

a follower being grooved on opposing sides and configured to engage the internal guide rails; and

a cylindrical magazine compression spring, the compression spring configured and arranged to store energy to move the at least one charge block into and out of the receiver.

8. The firearm system of claim 4, wherein the at least one charge block comprises side-by-side charges substantially equal in spacing to the number of barrel bores.

9. The firearm system of claim 8, wherein each of the charges comprise at least one dischargeable projectile, primer and propellant.

10. The firearm system of claim 3, further comprising an action cam positioned transversely in the receiver, the action cam comprising:

an action camshaft positioned adjacent the feed port, the action camshaft including:

a single lobe tip extending along a longitudinal axis of the action camshaft, the single lobe tip comprising a point positioned on a side of the action camshaft adjacent to the feed port, the lobe tip comprising one end positioned adjacent a rear face of a recoil shield, and the opposite end comprising a base circle of the camshaft; and

a set of firing pin clearance grooves extending perpendicular to the longitudinal axis of the action camshaft, and equal in number to the number of breech bores;

an arm or lever extending from a side or end of the action camshaft and perpendicular to the longitudinal axis of the action camshaft, the arm or lever configured and arranged to couple to a camshaft actuator; and

at least one timing pin or timing lobe, the timing pin pressed into, or the timing lobe integral with a body of the action camshaft, the timing pin or timing lobe configured and arranged to couple with a bridge of a feed control carriage.

11. The firearm system of claim 10, further comprising firing pin holes in the recoil shield, and a set of firing pins equal in number to the number of firing pin holes,

wherein the recoil shield includes a bridge or body positioned in the receiver between the action camshaft and the feed port, and coupled to the action camshaft, the bridge or body including a face substantially parallel to a face of the breech, the face of the breech transversely spanning a width of the barrel, and

the recoil shield including a wing extending from each end of the bridge or body longitudinally rearward toward a base of the receiver, the two wings adjacent the ends of the action camshaft,

and a rearward face of the bridge or body adjacent the lobe tip of the action camshaft; and

wherein the recoil shield includes a pair of spring-loaded captured rebound pins, one on each end of the bridge or body, and configured and arranged to contact a portion of an edge of the charge blocks; and

wherein each of the firing pin holes is enlarged on the rearward face of the bridge or body to form an cylindrical alignment socket for a matching ball formed adjacent a tip of each of the firing pins, the matching balls configured and arranged to maintain alignment of the firing pins and to prevent binding,

the alignment socket being of a depth greater than a radius of the matching balls to allow for movement of the recoil shield and movement of the firing pins, and further to provide a space for a flexible O-ring seal, the O-ring seal configured and arranged to prevent debris, fluids or gases from passing beyond the firing pin hole into the alignment socket, the O-ring seal positioned at a bottom of the alignment socket and configured to form a positive seal between the tip of the firing pin and an inside diameter of the alignment socket.

12. The firearm system of claim 11, wherein at least one of the firing pins extends through at least one of the firing pin holes.

13. The firearm system of claim 3, wherein the detachable ammunition magazine comprises a box-type magazine coupled to the receiver adjacent the feed port and substantially perpendicular to the barrel; and

wherein the detachable ammunition magazine is configured and arranged to sequentially feed the charge blocks into the feed port and to eject the charge blocks from the firearm system.

14. The firearm system of claim 2, wherein the breech comprises a substantially flat face transversely spanning a width of the barrel.

15. The firearm system of claim 14, further comprising a set of gas rings formed in a face of the breech.

16. The firearm system of claim 1, wherein the barrel is interchangeable with another barrel having four or five side-by-side barrel bores arranged with their axes substantially planar and parallel to each other and longitudinal to the receiver assembly.

17. The firearm system of claim 1, further comprising a set of forcing cones equal in number to the number of barrel bores, the forcing cones being formed in the bores and configured and arranged to facilitate entry of projectiles into the barrel bores.

18. The firearm system of claim 1, wherein the barrel is a singular barrel including all of the barrel bores.

19. The firearm system of claim 1, wherein the forward receiver and the barrel are interchangeable with other forward receivers and barrels.

* * * * *